Installation Manual

G4 with AutoFire™

Direct Vent Gas Fireplace Insert
Gas Fireplace
natural gas 780RN
propane gas 780RP

Canadian Patent 2,717,779 Issued October 24 2017
US Patent 10,060,624 Issued August 28 2018
US Patent 10,935,246 Issued March 2 2021

Installer: Place model/serial number here.

Installer: Leave this manual with the appliance.
Consumer: Retain this manual for future reference.

⚠ WARNING:
FIRE OR EXPLOSION HAZARD
Failure to follow safety warnings exactly could result in serious injury, death, or property damage.

Do not store or use gasoline or other flammable vapors and liquids in the vicinity of this or any other appliance.

WHAT TO DO IF YOU SMELL GAS

- **Do not try to light any appliance.**
- **Do not touch any electrical switch; do not use any phone in your building.**
- **Leave the building immediately.**
- **Immediately call your gas supplier from a neighbor's phone. Follow the gas supplier's instructions.**
- **If you cannot reach your gas supplier, call the fire department.**

Installation and service must be performed by a qualified installer, service agency or the gas supplier.

⚠ DANGER

Hot glass will cause burns.

Do not touch glass until cooled.

Never allow children to touch glass.

A barrier designed to reduce the risk of burns from the hot viewing glass is provided with this appliance and must be installed for the protection of children and other at-risk individuals.

This appliance may be installed in an after-market permanently located, manufactured (mobile) home where not prohibited by local codes. This appliance is only for use with the type of gas indicated on the rating plate. This appliance is not convertible for use with other gases, unless a certified kit is used.

INSTALLER: Leave this manual with the appliance.

CONSUMER: Retain this manual for future reference.

Massachusetts:

The piping and final gas connection must be performed by a licensed plumber or gas fitter in the State of Massachusetts. Also, see Carbon Monoxide Detector requirements in the this manual, page 40.

⚠ WARNING

This product can expose you to chemicals including Benzene, which is known to the State of California to cause cancer and birth defects or other reproductive harm. For more information go to www.P65Warnings.ca.gov.

Note: Natural gas, in its original state, contains Benzene.

Valor Fireplaces
190–2255 Dollarton Highway
North Vancouver, BC, Canada V7H 3B1
T 604.984.3496 F 604.984.0246
valorfireplaces.com

This appliance is a domestic room-heating appliance. It must not be used for any other purposes such as drying clothes, etc.

This appliance is suitable for installation in a bedroom or bed sitting room.

Ce guide est disponible en français sur demande.

NATIONAL FIREPLACE INSTITUTE NFI ADVOCATE

We recommend a US Certified National Fireplace Institute (NFI) specialist install our gas hearth products.

DESIGN CERTIFIED

CERTIFIED

The information contained in this manual is believed to be correct at the time of printing. Miles Industries Ltd. reserves the right to change or modify any information or specifications without notice. Miles Industries Ltd. grants no warranty, implied or stated, for the installation or maintenance of your heater, and assumes no responsibility for any consequential damage(s).

© Copyright Miles Industries Ltd., 2026. All rights reserved.
Designed and manufactured for Miles Industries Ltd.

Welcome to Valor®

This appliance has been professionally installed by:

Dealer Name: _____

Phone:_____

Please read this manual BEFORE installing and operating this appliance.

Fireplace Safety 4
Specifications 6
Kits & Accessories 7
Approved Venting Components 8
Dimensions & Cavity 9
Clearances 10
Installation Planning 12
- Before Installation 12
- Overview 13

Venting 14
Preparation 16
- Existing Fireplace Preparation 16
- Refacing Existing Fireplace 17

Installation 18
- Window and Optional Fan 18
- Connect Venting 19
- Gas Supply 20
- Liner Panels 23
- Fuel Beds 25
  - Birch Log Kit 1000BLKV2 25
  - Driftwood Kit 1000DWKV2 28
  - Traditional Log Kit 1000LSKV2 31
- Reinstall & Check Window 34
- Remote Control Pairing 35
- Check Operation and Aeration 36
- Front/Trim 37
- Handset Wall Holder 38

Wiring Diagram 39
Commonwealth of Massachusetts 40
Appendix A–Lighting Instructions Plate 41
Appendix B–Remote Control Operation 42
Appendix C–Spare Parts 49

Fireplace Safety

This manual contains very important information about the safe installation and operation of the fireplace. Read and understand all instructions carefully before installing and operating the fireplace. Failure to follow these instructions may result in possible fire hazard and will void the warranty.

Replacement manuals are available by contacting the Valor Customer Service at 1-800-468-2567, or by visiting valorfireplaces.com.

⚠ WARNING: Extremely Hot!

Heat and flammability

- Some parts of the fireplace are extremely hot, particularly the glass window. Use the barrier screen provided or a gate to reduce the risk of severe burns.
- The glass windows can exceed 500°F at full capacity.
- Always keep the appliance clear and free from combustible materials, gasoline, and other flammable vapors and liquids.
- Be aware of hot wall surfaces! The wall directly above the fireplace can get very hot when the fireplace heats. Although safe, it may reach temperatures in excess of 200°F (93°C) depending on choice of optional accessories. Do not touch!
- Be aware of hot shelf/hearth/floor surfaces! Any projections directly around the fireplace can get very hot when the fireplace heats. Although safe, they may reach temperatures in excess of 200°F (93°C) depending on their elevation. Be careful of touching these! Do not put objects on the hearth or shelf. Temperature of projection surfaces will be reduced when barrier screen is installed.
- Some materials or items, although safe, may discolor, shrink, warp, crack, peel, and so on because of the heat produced by the fireplace. Avoid placing candles, paintings, photos and other combustible objects sensitive to heat or furniture within 36 inches (0.9 m) around the fireplace.
- Solid wood flooring in front of the fireplace (if allowed) may shrink during the heating season due to heat.
- Due to high temperatures, the appliance should be located out of traffic areas and away from furniture and draperies.
- Clothing or other flammable material should not be placed on or near the appliance.

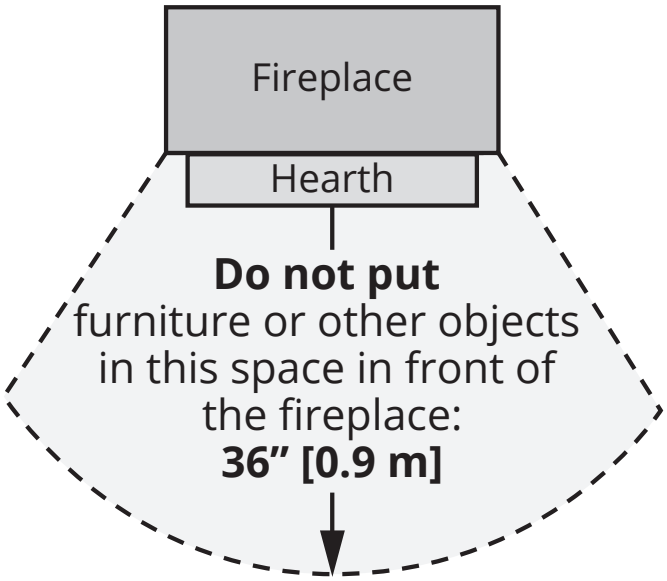

Barrier Screen and Safety

- A barrier designed to reduce the risk of burns from the hot viewing glass is provided with this appliance and must be installed for the protection of children and other at-risk individuals.
- Children and adults should be alerted to the hazards of high surface temperature and should stay away to avoid burns or clothing ignition.
- Young children should be carefully supervised when they are in the same room as the appliance. Toddlers, young children, and others may be susceptible to accidental contact burns. A physical barrier is recommended if there are at-risk individuals in the house. To restrict access to a fireplace or stove, install an adjustable safety gate to keep toddlers, young children, and other at-risk individuals out of the room and away from hot surfaces.
- Any safety screen, guard, or barrier removed for servicing an appliance, must be replaced prior to operating the appliance.

Fireplace Safety

Glass window

⚠ WARNING

Do not operate this appliance with the glass front removed, cracked, or broken.

Do not strike or slam the glass front.

Replacement of the glass front should be performed by a licensed or qualified service person.

- The glass front assembly must be in place and sealed before the unit can be placed into safe operation.
- The glass front assembly must only be replaced as a complete unit, as supplied by the fireplace manufacturer. No substitute material may be used.
- Do not use abrasive cleaners on the glass front assembly. Do not attempt to clean the glass when it is hot.

Venting

- This unit must be used with a vent system as described in this manual. No other vent system or components may be used.
- Never obstruct the flow of combustion and ventilation air. Keep the front of the appliance clear of all obstacles and materials for servicing and proper operation.
- This gas fireplace and vent assembly must be vented directly to the outside and must never be attached to a chimney serving a separate solid fuel burning appliance. Each gas appliance must use a separate vent system. Common vent systems are prohibited.

Intended use

- This appliance is designed and approved as a supplemental heater and provides the potential for most energy conservation when used while attended. The use of an alternate primary heat source is advisable.
- This unit is not for use with solid fuel.
- Do not use this heater as a temporary source of heat during construction.

Installation and Servicing

- Installation and repair should be done by a qualified service person. The appliance should be inspected before use and at least annually by a professional service person. More frequent cleaning might be required due to excessive lint from carpeting, bedding material, et cetera. It is imperative that control compartments, burners, and circulating air passageways of the appliance be kept clean.
- Do not use this appliance if any part has been under water. Immediately call a qualified service technician to inspect the appliance and to replace any part of the control system and any gas control that has been under water.

Specifications

Approval & Codes

This appliance is certified to ANSI Z21.88/CSA 2.33 American National Standard / CSA Standard for Vented Gas Fireplace Heaters for use in Canada and USA, and to CGA 2.17-91 High Altitude Standard in Canada. This appliance is for direct vent installations.

This appliance complies with CSA P.4.1-15 Testing method for measuring annual fireplace efficiencies.

The installation must conform to local codes or, in the absence of local codes, with the National Fuel Gas Code, ANSI Z223.1/NFPA 54 or the Natural Gas and Propane Installation Code CAN/CGA-B149.1. Only qualified licensed or trained personnel should install this appliance.

This appliance must be electrically grounded in accordance with local codes, or, in the absence of local codes, with the National Electrical Code, ANSI/NFPA 70 or the Canadian Electrical Code, CSA C22.1.

Ratings

Model	780RN	780RP
Gas	Natural	Propane
Altitude (Ft.)*	0-4,500 feet*	
Input Maximum (Btu/h)	28,000	28,000
Input Minimum (Btu/h)	14,000	14,000
Manifold Pressure (in w.c.)	3.2″	10.5″
Minimum Supply Pressure (in w.c.)	5″	11″
Maximum Supply Pressure (in w.c.)	10″	14″
Main Burner Injector Marking	850	300
Pilot Injector Marking	51	30
Min. Rate By-Pass Screw	185	125

*High Altitude Installations

Input ratings are shown in BTU per hour and are certified without deration for elevations up to 4,500 feet (1,370 m) above sea level.

For elevations above 4,500 feet (1,370 m) in USA, installations must be in accordance with the current ANSI Z223.1 and/or local codes having jurisdiction. Heating value of gas in some areas is reduced to compensate for elevation—consult your local gas utility to confirm.

For installations at elevations above 4,500 feet (1,370 m) in Canada, please consult provincial and/or local authorities having jurisdiction.

Supply Gas

Heater engine 780RN is used with natural gas.

Heater engine 780RP is used with propane gas.

The supply pressure must be between the limits shown in the Ratings section.

The supply connection is 1/2″ NPT female and located on the left side of the control valve. The gas line entry point is on the the upper left hand side of the fireplace. See page 22 for connection details.

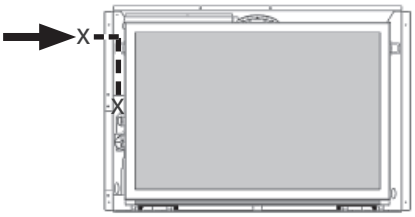

Electrical

The 780R is designed to run on battery power and does not require an electrical source to operate as a heater. However, if the appliance is fitted with a fan, a grounded power source is required.

Conversion Kits

The 780R is supplied as natural gas or propane gas and is field convertible between fuels. See instructions packaged with the conversion kits for further information.

Floor/Hearth

This appliance is approved for installation into existing solid-fuel burning fireplaces only. Combustible material such as plywood and so on may be used for leveling and shimming beneath the unit. This appliance does not require a hearth other than to support the weight of certain fronts.

Outdoor Conversion Kit

The 780R models are supplied standard for indoor applications and may be adapted for installation in specific “outdoor” applications protected from weather as defined in the GV60CKO outdoor conversion kit manual.

⚠ WARNING

NO ELECTRICAL CONNECTION ALLOWED for any outdoor installation!

Kits & Accessories

Required Kits

Fuel Beds (choose one)		
1000LSKV2	Traditional Log Set	
1000DWKV2	Driftwood Log Set	
1000BLKV2	Birch Log Set	
Liners (choose one)		
786LSLV3	Ledgestone Panels	
787RGL	Reflective Glass Panels	
788FBLV2	Fluted Black Panels	
789VRLV2	Valor Red Brick Panels	
Fronts (choose one)		**Barrier Screen**
784EC	Edgemont Craftsman Fronts, various colors	4007655AZ
790FTV	Floating Trim vintage iron	4003371AZ
791ST	Square Trim Kits, various colors	4003371AZ
792FT	Floating Trim Kits, various colors	4003371AZ
798FF	Floating 4-Sided Trims, various colors	4003371AZ
799ED	Edgemont Door Kits, various colors	4004348AZ
Backing Plates for 784EC and 799ED fronts (choose one)		
799BPB-1 799BPB-2 799BPB-3	3-Sided flat Backing plates, black	
799STB-1	3-Sided square Backing plate, black	
799BPB-4S	4-Sided flat Backing plate, black	
Approved Venting Components		
See next page for list of approved venting components		

Optional Accessories

Optional Backing Plates	
794BPB 794BPB-1	Backing plates Black for 790, 791 & 792
-CSTM	Custom size 794BPB, no flange, for 790/791/792
-CSTM-FL	Custom size 794BPB, w/flange, for 790/791/792
Gas Conversion Kits	
780RNGK	Conversion Kit to Natural Gas
780RPGK	Conversion Kit to Propane Gas
Other Accessories	
793RT	Riser trim black for 790, 791, 792 & 798, various colors
785RGP	Reflective Glass Panel for 788FBLV2
795CFKV2*	Circulating Fan Kit
796ALP	Adjustable Leveling Platform
1265WSK	Wall Switch Kit
RBWSK	Remote Battery & Wall Switch Kit
GV60CKO	Outdoor Fireplace Conversion Kit
Hearth Gate	Hearth gates such as Cardinal's VersaGate are available at retail stores carrying safety products for children.

⚠ WARNING

***NO ELECTRICAL CONNECTION ALLOWED for any outdoor installation!**

Above information accurate at the time of printing and subject to change without notice.

Approved Venting Components

Approved Direct Vent Suppliers for Valor Models 700[3], 739[2] and 780[3]							
Venting Parts Description			Venting Parts Code / availability by Manufacturer				
			DURA-VENT	SELKIRK	ICC EXCEL DIRECT	MILES INDUSTRIES	BDM
Termination Caps	Vertical	Standard Co-axial	46DVA-VC	4DT-VT	—	—	DVR6-VCH DVR6-VCSB
		High Wind Co-axial	46DVA-VCH	—	TM-4SVT	—	—
		Extended Co-axial	46DVA-VCE	—	—	—	—
	Vertical	Co-linear	46DVA-CL33 46DVA-CL33H 46DVA-CL33P	—	TM-IVT	559CLT	940033B 940033HWS 940033RD
	Horizontal		—	—	—	**720SWK-M** for 739M & 739V **720SWK-M2** for 700M, 700R, 780M & 780R	—
Vent Adapters / Couplers		Universal Adapter 3" Flex Coupler	2150	—	TM-CFAA3	—	95090390
		Co-linear Flex Connector	46DVA-ADF	—	—	—	—
		Co-linear-to-Co-axial Adapter	46DVA-GK 46DVA-CLTA	—	TM-4CTA	—	—
Aluminum Flexible Liner		3" diameter	NOTE: 2-ply liner approved to CAN/ULC S635 suitable for venting gas appliances. As manufactured by Z-Flex, Flexmaster and others.				
			2280 Series	AF3-35L	TM-ALK33 TM-ALT33	—	952703
Flashings		Roof Flashing 0/12-6/12	46DVA-F6	4DT-AF6	TF-4FA	—	DVR6-AF012
		Roof Flashing 7/12-12/12	46DVA-F12	4DT-AF12	TF-4FB	—	DVR6-AF712
		Flat Roof Flashing	46DVA-FF	—	TF-4F	—	DVR6-TCF
		Masonry Flashing	—	—	TF-4MF	559FSK	

Notes:

1. Follow instructions supplied with each manufacturer's components.
2. The 720SWK-M Sidewall Kit can only be installed on the 739M and 739V models.
3. The 720SWK-M**2** Sidewall Kit can only be installed on the 700M, 700R, 780M and 780R models.
4. Do not mix components from different vent manufacturers except those of Miles Industries which have been approved with other manufacturers'.

Dimensions & Cavity

Fireplace Dimensions

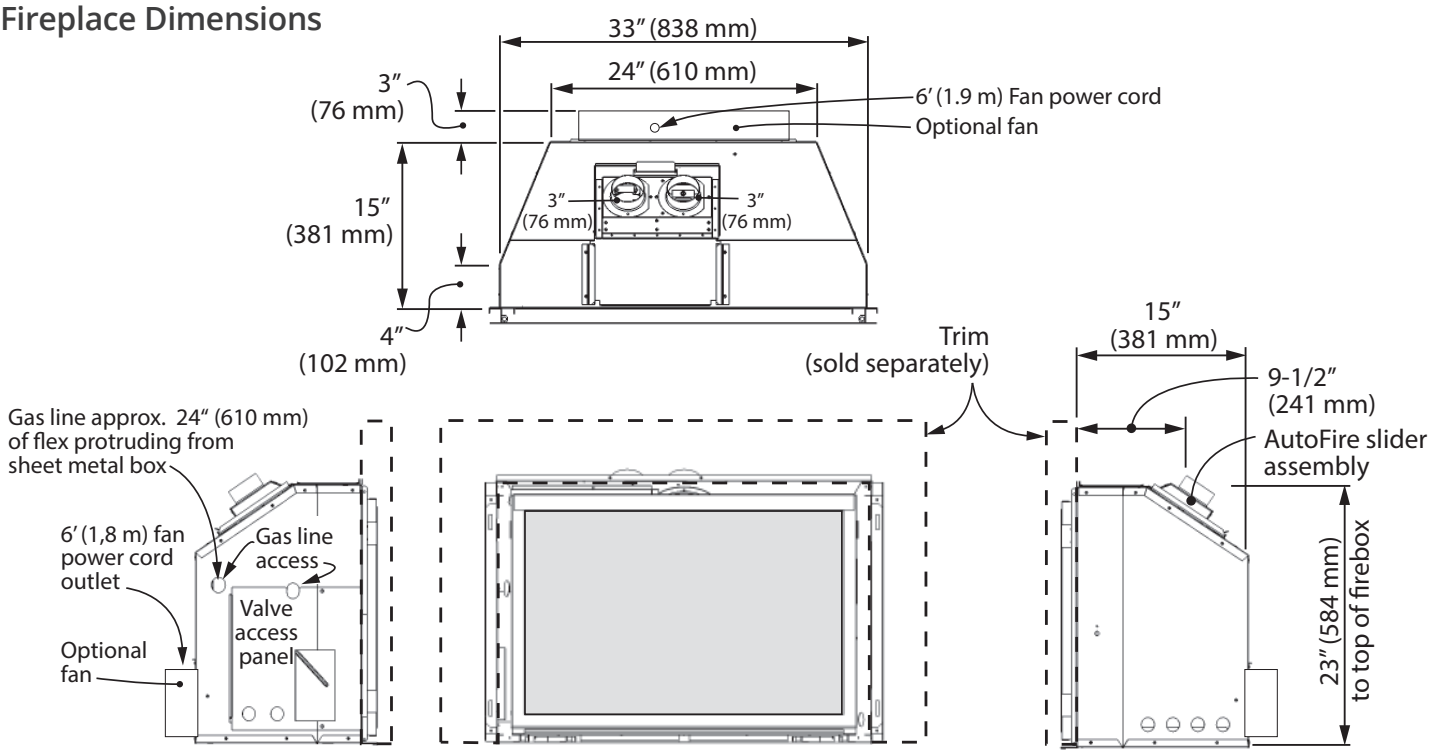

Cavity Dimensions

Check that masonry step does not interfere with install dimensions or vent pipe. If mantel is combustible, see following table for allowable clearances. A hearth that is at a height within 4" (102 mm) of the bottom of the heater MUST be non-combustible.

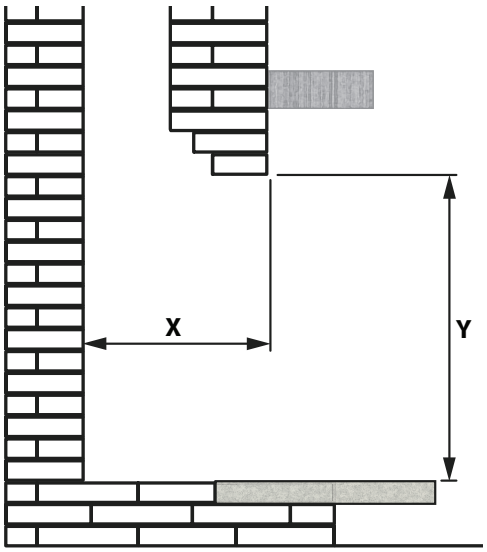

Minimum Cavity Dimensions					
		All trims EXCEPT: 799ED or 784EC Edgemont Doors**		799ED or 784EC Edgemont Doors	
		Standard Install	w/796 Leveling Platform	w/799**BPB** Flat Backing Plates	w/799**STB-1** Square Backing Plate
Width (min. fireplace opening at front)		33-1/4" [845 mm]	33-1/4" [845 mm]	35-3/4" [908 mm]	33-1/4" [845 mm]
Depth X	No Fan	15-1/2" [394 mm]	16" [407 mm]	16-3/4" [426 mm]	15-1/2" [394 mm]
	w/795 Fan	18-1/2" [470 mm]	18-1/2" [470 mm]	19-3/4" [502 mm]	18-1/2" [470 mm]
Height Y *		23-1/4" [591 mm]	23-1/4" [591 mm]	23-3/4" [604 mm]	23-3/4" [604 mm]

* Please note that the 799BPB-4S 4-Sided backing plate extends below the bottom of appliance by 2-13/16" (72 mm). Plan accordingly!

**If using a custom-sized plate 794BPB-CSTM or 794BPB-CSTM-FL, the minimum height and width will vary according to plate size; the minimum depth may be reduced by the flange depth if present (-FL plates).

Clearances

Combustible Mantel / Sidewall

Combustible Mantel Clearances

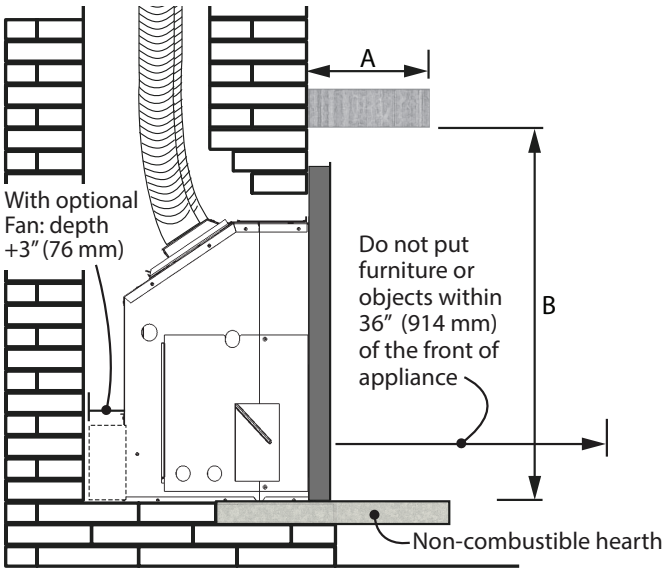

Clearances based on diagram above in Inches [mm]				
Mantel Projection A	1 [25]	4 [101]	8 [203]	14 [355]
Mantel Projection B*	34 [864]	36 [914]	38 [965]	40 [1016]

* Measure taken from the underside of the mantel to finished hearth or surface that the unit is sitting on.

Finishing Materials

Combustible Materials: Materials made of or surfaced with wood, compressed paper, plant fibers, plastics, or other material that can ignite and burn, whether flame proofed or not, or plastered or unplastered.

Non-Combustible Materials: Material which will not ignite and burn. Such materials are those consisting entirely of steel, iron, brick, tile, concrete, slate, glass or plasters, or any combination thereof.

Materials that are reported as passing ASTM E 136, Standard Test Method for Behavior of Materials in a Vertical Tube Furnace at 750 °C.

⚠ WARNING

Some materials or items, although safe, may discolor, shrink, warp, crack, peel, and so on because of the heat produced by the fireplace. Avoid placing candles, paintings, photos, and other items sensitive to heat around the fireplace.

Sidewall Clearances

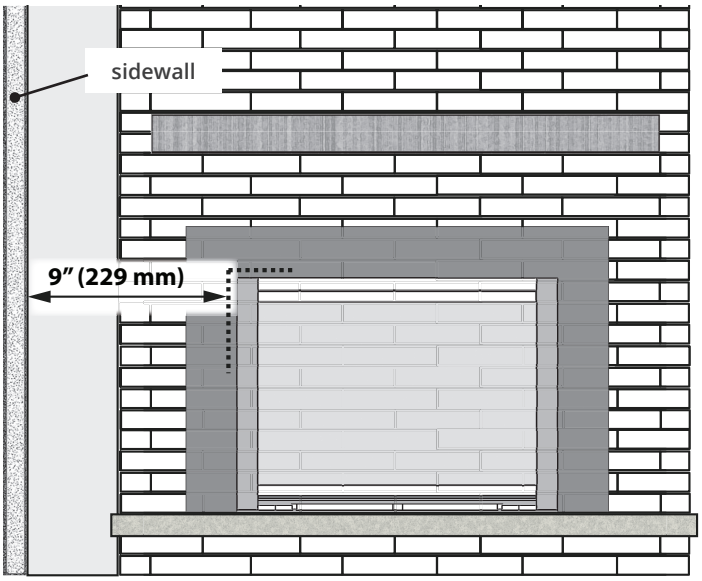

Minimum distance from side of appliance (liner box) to combustible wall: 9" [229 mm] (see above).

Mantel legs projecting forward less than 6" [152 mm] may be located within 5" [127 mm] of the side of the appliance (liner box).

Floor/ Hearth Clearances

Combustible shims/supports may be used beneath the appliance to level or raise the appliance within the existing fireplace cavity.

Combustible flooring/hearths in front of the appliance must be at a minimum of 4" [102 mm] below the bottom of the appliance. The gas insert does not require a hearth.

⚠ WARNING

HOT GLASS! The use of a screen in front of the glass is highly recommended, particularly in households with children

⚠ WARNING

HOT HEARTH/FLOOR! The hearth or floor in front of the fireplace may become very hot when the fireplace heats. Do not use the hearth as a seat or shelf. Solid wood flooring in front of the fireplace (if allowed) may shrink during the heating season due to heat.

Clearances

720SWK-M2 Sidewall Vent Terminal

Horizontal Vent Termination Location

- The vent terminal must be located on an outside wall or through the roof.
- This direct vent appliance is designed to operate when an undisturbed airflow hits the outside vent terminal from any direction.
- The minimum clearances from this terminal that must be maintained when located on an outside wall are shown in figure below. Any reduction in these clearances could result in a disruption of the airflow or a safety hazard. Local codes or regulations may require greater clearances.
- The vent terminal must not be recessed into a wall or siding.
- The vent terminal should be positioned where any snowdrifts will not cover it.
- Sidewall vent terminations require a terminal guard such as 658TG or 845TG when accessible—within 7' of ground.

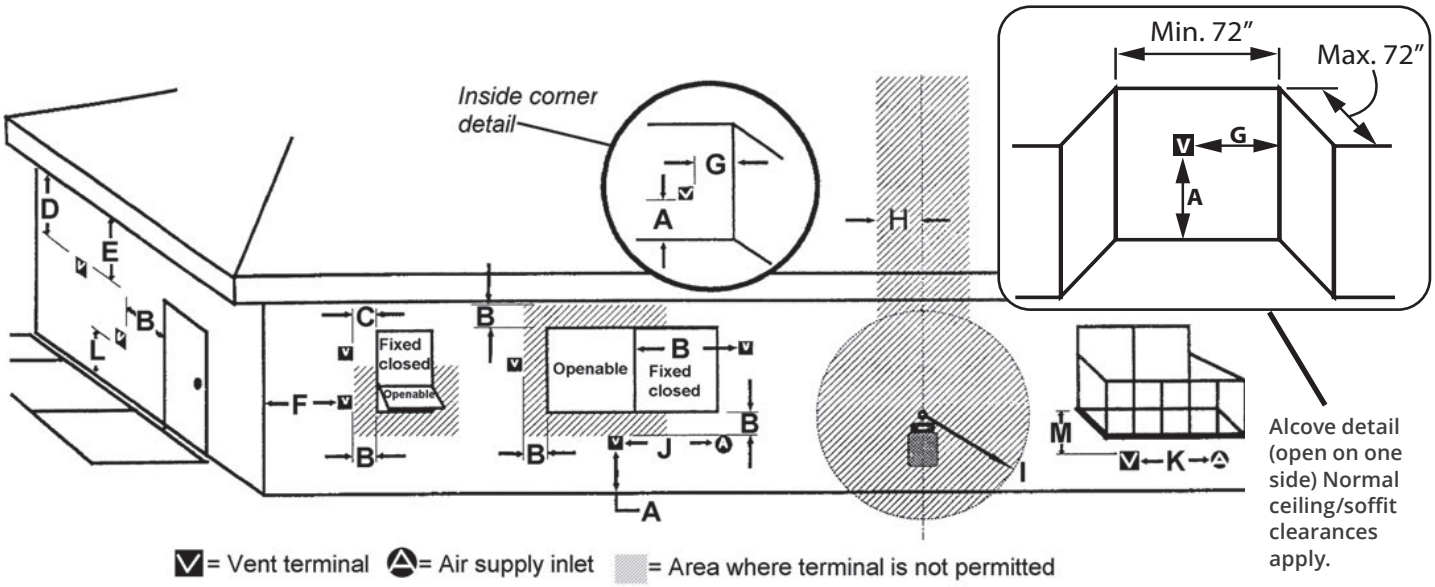

KEY	VENT TERMINAL LOCATIONS - MINIMUM DISTANCES	MINIMUM CLEARANCE	
		Inches	Cm
A	Clearance above grade, verandah, porch, deck or balcony	12	30
B	Clearance to window or door that may be opened	12	30
C	Clearance to permanently closed window (recommended to prevent condensation on window)	12	30
D	Vertical clearance to ventilated soffit located above the terminal within a horizontal distance of 2 feet (60 cm) from the center-line of the terminal	18	46
E	Clearance to unventilated soffit	12	30
F	Clearance to outside corner (measured from the center of vent)	12	30
G	Clearance to inside corner (measured from the center of vent)	12	30
H	Horizontal clearance to center-line of meter/regulator assembly located within 15 feet (4.6 m) below the terminal	36	90
I	Clearance to service regulator vent outlet	36	90
J	Clearance to non-mechanical air supply inlet to the building or the combustion air inlet to any other appliance	12	30
K	Clearance to a mechanical air supply inlet	72	180
L	Clearance above paved sidewalk or a paved driveway located on public property ***Note:*** *A vent must not terminate directly above a sidewalk or paved driveway, which is located between two single-family dwellings and serves both dwellings.* ***THIS DOES NOT APPLY to direct vent, non-consdensing appliances in the Province of Ontario.***	84	210
M	Clearance under a verandah, porch, deck or balcony *Only permitted if veranda, porch, deck or balcony is fully open on a minimum of 2 sides beneath the floor*	12	30

Note: Local codes and regulations may require different clearances.

Installation Planning

Caution

Only qualified, license, or trained personnel should install this appliance.

Before Installation

1. YOU NEED TO KNOW FROM THE HOMEOWNER:
   - Whether any facing material will be used over the existing fireplace.
   - What trim, front, and optional accessories (if any) will be installed with this unit.
2. Unpack the appliance and recycle the packaging.
3. Check that you have everything, using the Pack Content sheet. Also, check that you have:
   - A fuel bed (packed separately)
   - Liner panels (packed separately)
   - Venting accessories
   - Electrical accessories (if using a fan kit)
   - Any other ordered accessories
4. Carefully read the Installers Checklist included with the fireplace for the installation sequence.

Note

The following steps must be done BEFORE the appliance is placed in its final position, since the connections are done from the back of the appliance:

- **Electrical connections (if needed for fan kit)**

WARNING

NO ELECTRICAL CONNECTION ALLOWED for any outdoor installation!

Installation Planning

Overview

Note

This appliance may ONLY be installed in an existing unaltered, functioning solid-fuel burning fireplace with a working flue and constructed of non-combustible material.

This appliance may be installed in outdoor, weather protected environments as defined in the GV60CKO Outdoor Conversion Kit instruction manual.

DO NOT install into combustible construction. This appliance is NOT APPROVED for installation with a zero clearance kit.

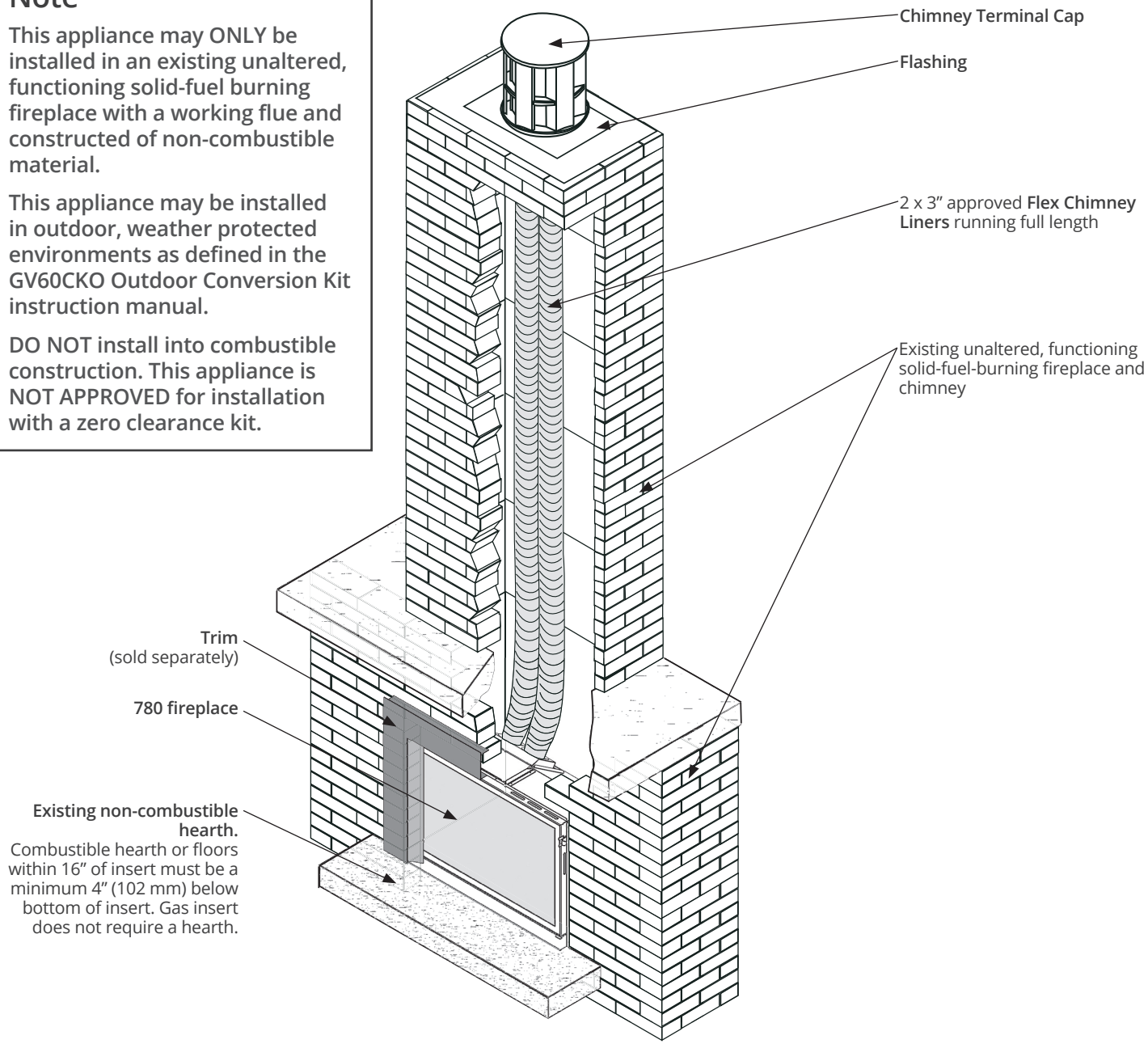

⚠ WARNING

HOT HEARTH / FLOOR! The hearth or floor in front of the fireplace may become very hot when the fireplace heats. Do not use the hearth as a seat or shelf. Solid wood flooring in front of the fireplace (if allowed) may shrink during the heating season due to heat.

⚠ WARNING

Some materials or items, although safe, may discolor, shrink, warp, crack, peel, and so on because of the heat produced by the fireplace. Avoid placing candles, paintings, photos, and other items sensitive to heat around the fireplace.

Venting

Typical Vent Installation

Flex liners may only be installed into solid-fuel burning fireplace and chimney systems (no combustible constructions).

The appliance must not be connected to a chimney flue serving a separate solid-fuel burning appliance.

See “Approved Venting Components” on page 8 of this manual.

Vent Location

The vent terminal must be located through the roof. This direct vent appliance is designed to operate when an undisturbed airflow hits the outside vent terminal from any direction.

Check local codes for allowable vertical vent termination.

Venting Table

Maximum vertical height	40 ft (measured to bottom of termination)
Minimum vertical height	10 ft (measured to bottom of termination)
Maximum horizontal run	4 ft (measured center to center of pipe)
Maximum offset angle	45˚ (sweeping bend to allow for obstructions)

Venting Notes

Where possible, avoid joining flex pipes. If joints are required, use a approved connector and seal joints with RTV high temp sealant.

Horizontal offset is permissible to allow for routing around masonry projections. Avoid bending flex pipe over a 45 degrees radius where possible.

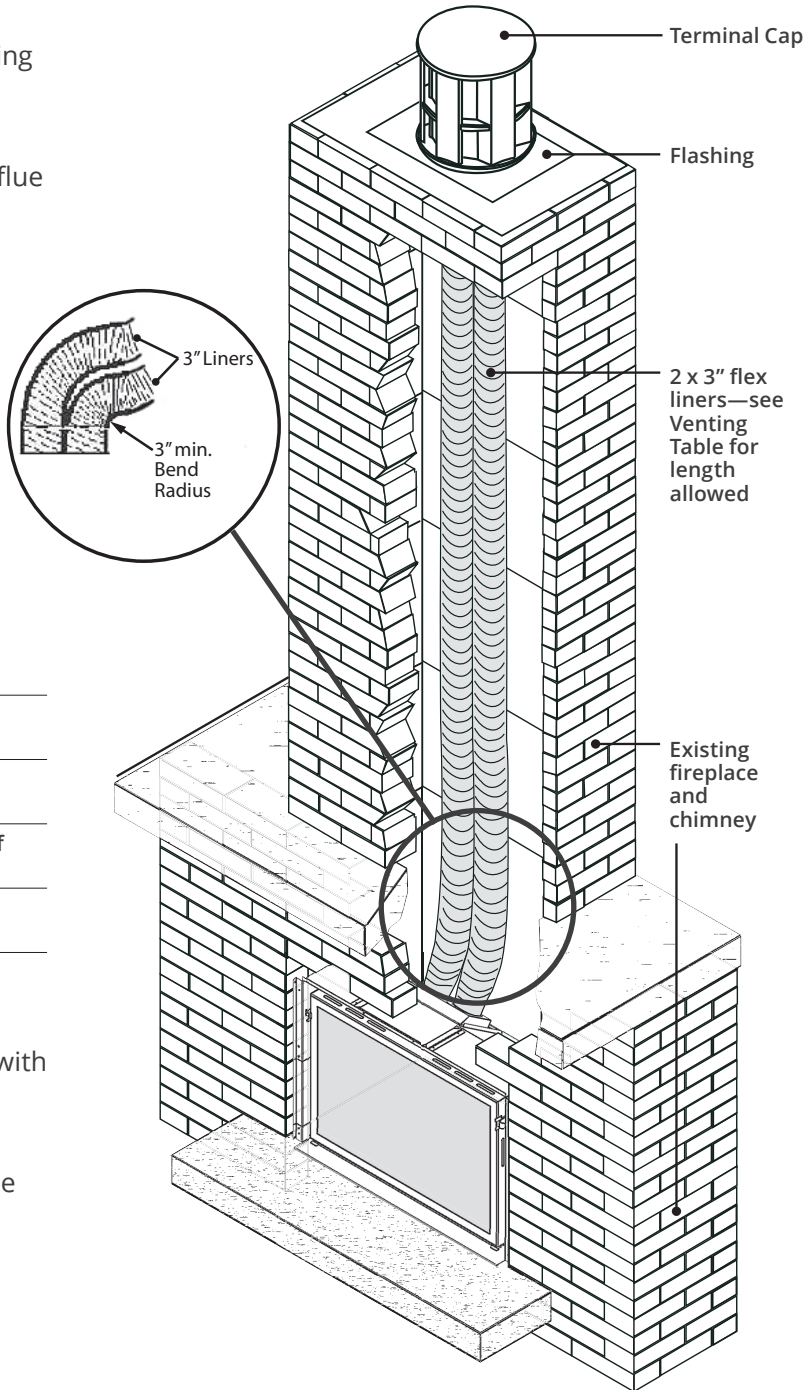

Alternate Venting with optional 720SWK-M2—Co-linear sidewall kit

The appliance may also be vented using the optional 720SWK-M2—Co-linear sidewall kit—see installation instructions supplied with the kit.

Terminal Clearances: see "720SWK-M2 Sidewall Vent Terminal" on page 11.

NOTE

Depending of the length of the vertical vent run, the AutoFire vent plate may need to be replaced by the vent plate included with the 720SWK-M2 terminal—see instructions provided with the terminal.

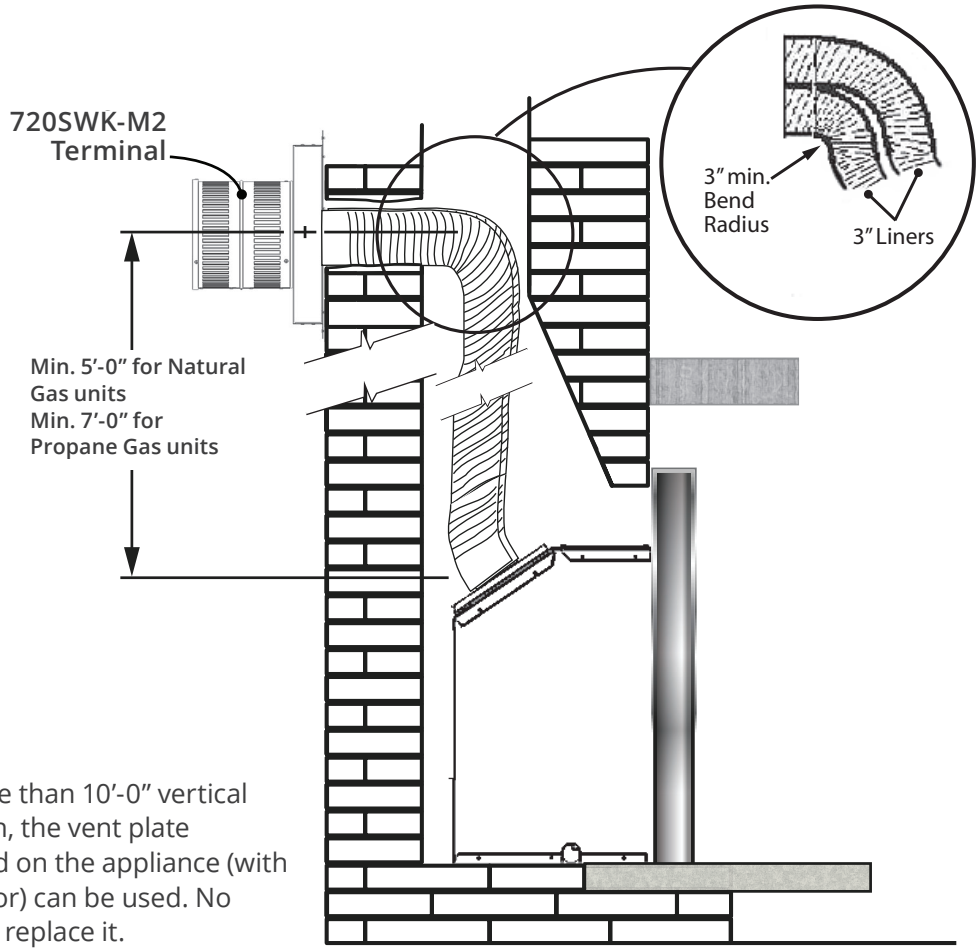

* If more than 10'-0" vertical vent run, the vent plate supplied on the appliance (with restrictor) can be used. No need to replace it.

Preparation

Existing Fireplace Preparation

A few points must be considered before inserting the 780 into an existing fireplace cavity. Generally, no modifications are allowed to the existing fireplace that will compromise the integrity of the existing fireplace.

Components that are bolted or screwed on such as dampers or baffles may be removed to accommodate the installation of the 780 engine. Refractory bricks and log grates may also be removed.

Cutting away any sheet metal parts of the existing fireplace to accommodate the installation of the 780 is prohibited.

Check with local authorities if in doubt.

Clean Fireplace and Chimney

Have the chimney swept and the fireplace cavity including ash dumps and clean-outs cleaned before installing the 780 heater and vent liners. Any creosote or soot residue remaining in the fireplace cavity chimney or clean-out may cause odors or stains once the 780 insert is installed. Consult with chimney sweep for information on how best to clean.

Existing Dampers

Factory-built, zero-clearance fireplaces will require the damper to be removed in order to install the vent liners. These dampers are usually bolted into place. Dampers in masonry fireplaces must be fixed open and may remain in place.

Ash Retaining Curbs

Some fireplaces (particularly factory-built) have a raised curb at the front edge to retain ashes. Check the dimensions carefully to ensure the 780 engine will fit behind any raised curb (some curbs may be removed separately from the refractory base).

Gas Line Routing

Plan the routing of the gas line before proceeding. Utilize the existing hole for the gas line of the factory-built fireplace.

If the fireplace has no access hole, carefully drill an access hole of 1.5 inch (38 mm) or less through the lower sides or bottom of the firebox. The access hole must be plugged with non-combustible insulation after the gas supply line has been installed.

Existing Fireplace Preparation

See *Dimensions* section for detailed location of gas inlet. Also, take into consideration whether or not a fan or shut-off valve will interfere when planning routing of the gas line.

Existing Glass Doors and Wire Screens

Existing glass doors must be permanently removed prior to installing the 780 insert.

Combustible Mantels

Combustible mantel clearances must conform to those required for the original solid-fuel fireplace into which the 780 is being installed.

Attach Warning Conversion Plate to Existing Fireplace

(Label supplied loose with 780 heater)

Attach the "This fireplace has been converted..." label **to the existing fireplace** using screws or other mechanical means and store any removed parts in back of the existing fireplace for future use.

Unpack the Appliance

WARNING

Beware of sharp edges! Wear gloves!

1. Unpack the appliance.
2. Unpack any loose items from around the appliance and check against the Pack Content list provided in the documentation package.
3. Remove the window and set aside in a safe place to avoid damage—see next page.
4. Verify that you have all the components required for the installation, including:
   - liner panels
   - fuel bed
   - trim
   - venting components and accessories
   - fan and electrical components for its installation (if used)

Preparation

Refacing Existing Fireplace

Rules for Refacing Existing Fireplace

- Masonry refacing installations are subject to approval by the local authority having jurisdiction. **This installation configuration may not be allowed in all jurisdictions.**
- **Once a masonry fireplace has been converted from a solid-fuel fireplace to a gas fireplace using this refacing configuration, it MUST NOT be converted back to a solid-fuel fireplace.**
- Built-out cavity **must be sealed** all around so heat cannot escape through joints.
- Vent liners MUST be completely inserted inside existing non-combustible solid-fuel burning chimney which must be in good working condition.
- Non-combustible framing with steel studs ONLY
- Non-combustible building and finishing materials as stated in this manual.
- Combustible Mantel Clearances allowed in front of non-combustible material as follows (*measured from bottom of appliance to bottom of mantel/shelf):

Mantel Projection A	2" (51 mm)	4" (102 mm)	8" (203 mm)
Mantel Height B*	38" (965 mm)	40" (1016 mm)	42" (1067 mm)

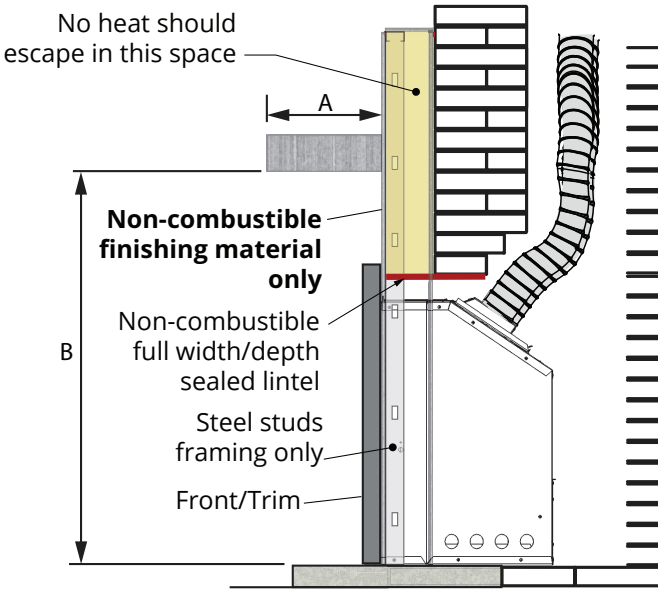

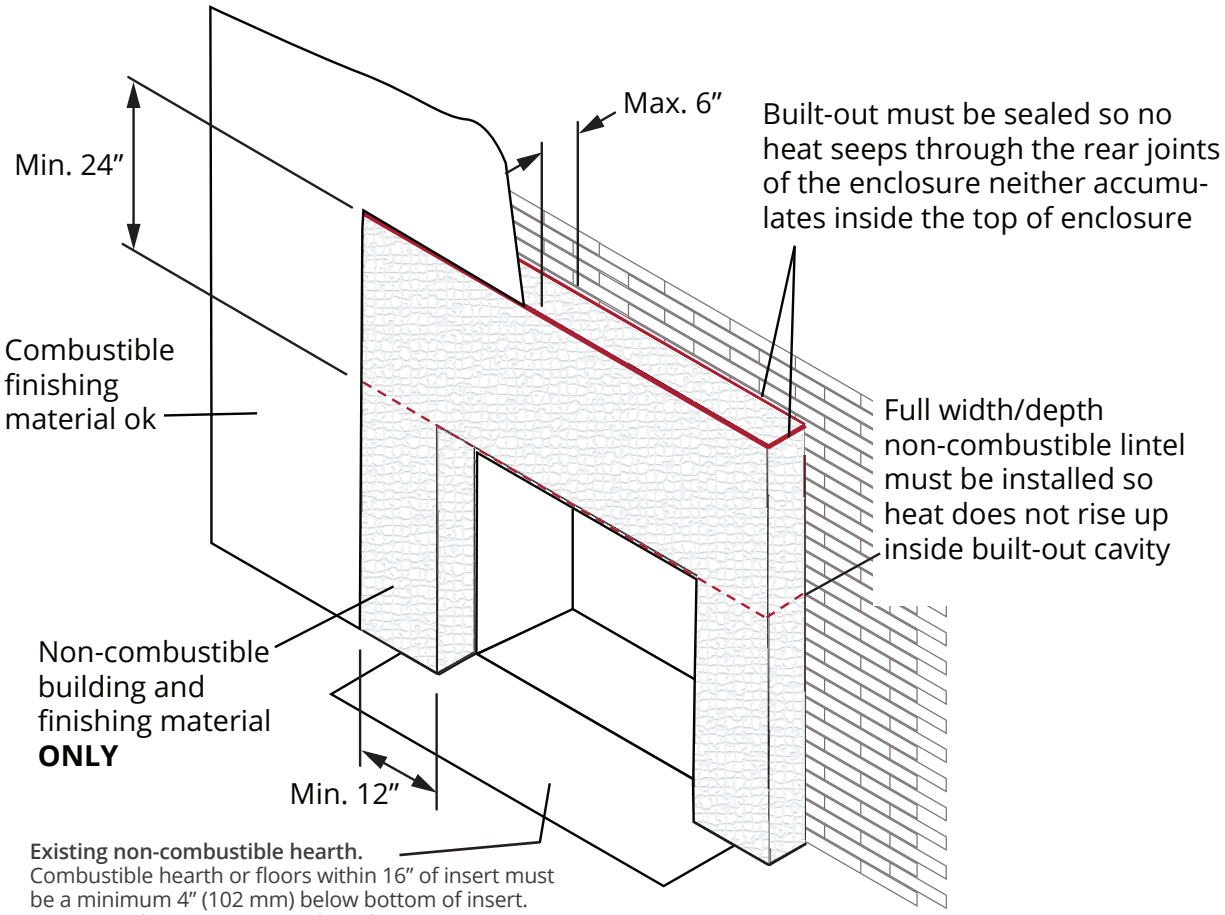

Existing non-combustible hearth.
Combustible hearth or floors within 16" of insert must be a minimum 4" (102 mm) below bottom of insert.
Gas insert does not require a hearth.

Remove Window

The window is held in place by a spring-loaded lever on each side. To remove the window:

1. Locate the levers on each side of the window towards the top. Using your finger, pull the lever towards you and unhook it from the window frame bracket.

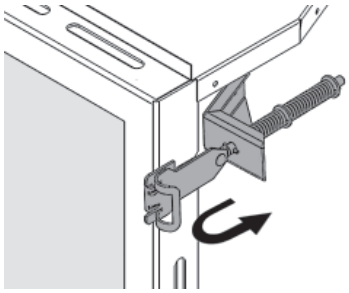

2. Gently pull the top of the window outward.

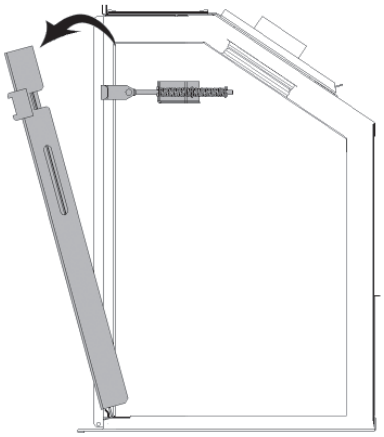

3. Lift the window out of its bottom railing and set it aside in a safe place to avoid damage.

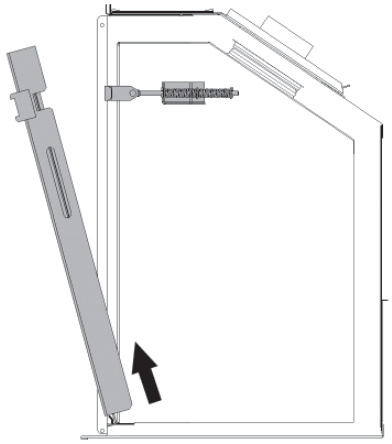

Install Fan Kit (if used)

If the 795CFKV2 Circulating Fan Kit (blower) is to be installed, we suggest that you do it now.

The fan cavity is accessible from the back of the firebox to facilitate its installation. If the fan is retrofitted after the installation of the appliance, the appliance will need to be removed. Therefore, we recommend that, where possible, the fan be installed before the appliance is fitted into the cavity.

Refer to instructions provided with the 795CFKV2 to install the fan.

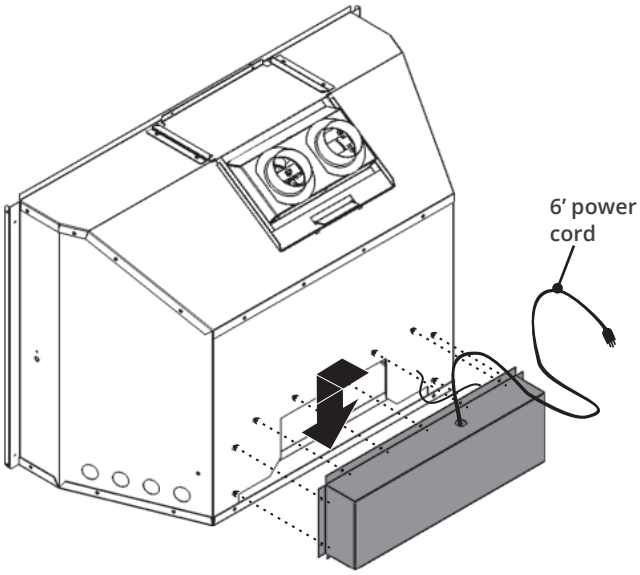

⚠ WARNING

NO ELECTRICAL CONNECTION ALLOWED for any outdoor installation!

Connect Venting

IMPORTANT: This appliance's venting system is room sealed and therefore, does not require room air to be used in the combustion process.

1. Rough-in two 3" diameter vent liners into the existing chimney system from the roof. Be careful not to tear or damage the liners in the process. It may be easier to install both liners at the same time rather than one at a time. Leave plenty of liners at the bottom to facilitate the connection of the liners to the vent slider. **It is best to leave the top termination until later.**
   Designate and mark the top and bottom of one liner as "EXHAUST" to avoid confusion later.
2. Release the two screws retaining the vent slider to the front of the firebox. Remove the slider from the firebox by sliding it towards the back of the firebox.
3. Fit the two liners **ensuring that the exhaust liner is connected to the identified "EXHAUST" vent collar.** Secure liners to collars with hose clamps (included) and 2 tapping screws per liner.
4. Slide the firebox onto the vent slider in the cavity taking care not to damage the liners. **Make sure that the rear edge of the slider is hooked over the cleat on the firebox.** Secure the vent slider to the front of the firebox with two screws removed earlier.
5. From the roof, pull the liners and fit the flashing.
6. Fit the terminal cap **ensuring that the exhaust liner is connected to the exhaust vent collar.** Secure with screws.
7. Seal the terminal and flashing from water penetration as required.

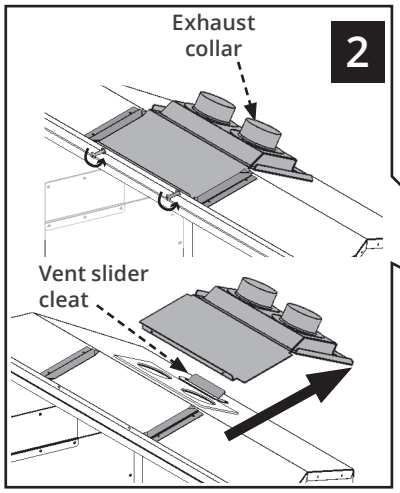

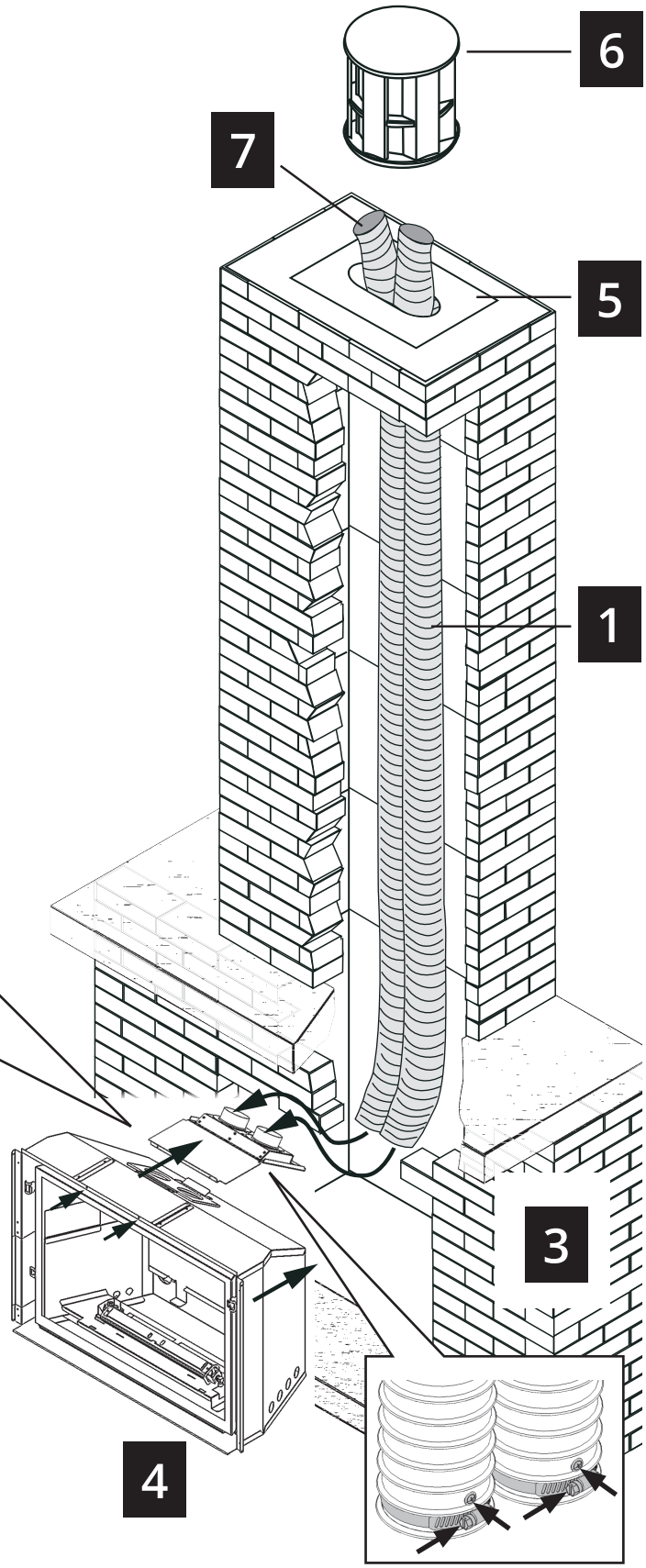

⚠ WARNING

Failure to position the parts in accordance with these diagrams or failure to use only parts specifically approved with this appliance may result in property damage or personal injury.

Connect Gas Supply

The gas supply inlet connection is a 1/2" NPT female. Stainless steel flexible connector with gas shut-off valve supplied with the appliance.

Use only new black iron or steel pipes, CSST, or copper tubing if acceptable—check local codes. Note that in USA, copper tubing must be internally tinned for protection against sulfur compounds.

The burner module and gas train on this appliance may be removed as a unit for servicing. The flex pipe supplied with the unit provides a union for removal of the module.

Unions in gas lines should be of ground joint type.

The gas supply line must be sized and installed to provide a supply of gas sufficient to meet the maximum demand of the appliance without undue loss of pressure.

Sealant used must be resistant to the action of all gas constituents including LP gas. Sealant should be applied lightly to male threads to ensure excess sealant does not enter gas lines.

Pressure test the supply line for leaks.

The appliance and its individual shut-off valve must be disconnected from the gas supply piping system during any pressure testing of that system at test pressures in excess of 1/2 psig (3.5 kPa).

The appliance must be isolated from the gas supply piping system by closing its equipment shut-off valve during any pressure testing of the gas supply piping system at test pressures equal to or less than 1/2 psi (3.5 kPa).

Failure to either disconnect or isolate the appliance during pressure testing may result in regulator or valve damages and void the warranty. Consult your dealer in case of damages.

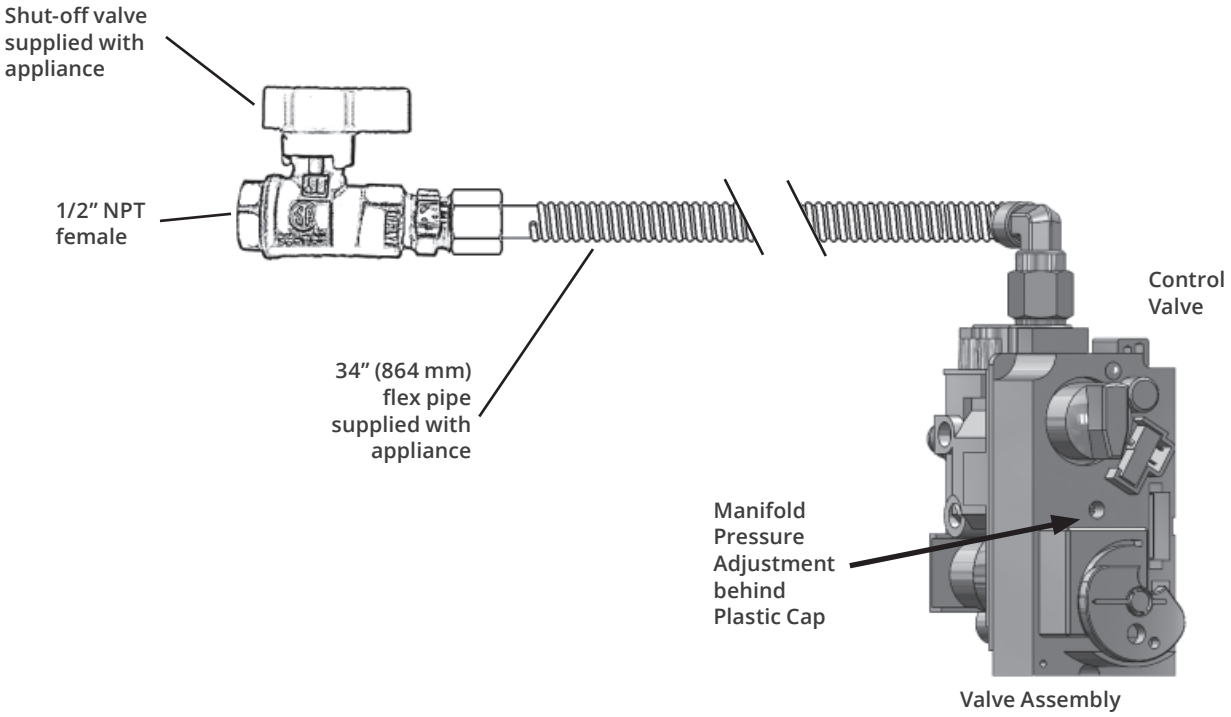

Pressure Test Points

The minimum supply pressure is given in the section Specifications of this manual—page 6.

All piping and connections must be tested for leaks after installation or servicing. All leaks must be corrected immediately.

When testing for leaks:

- Make sure that the appliance is turned off.
- Open the manual shut-off valve.
- Test for leaks by applying a liquid detergent or soap solution to all joints. Bubbles forming indicate a gas leak.

WARNING

NEVER USE AN OPEN FLAME to check for leaks. Correct any leak detected immediately.

The pressure test tapping locations are shown in the figure below. An internal regulator within the valve controls the burner manifold pressure.

The correct pressure range is shown in the table in section Specifications of this manual on page 6. The pressure check should be made with the burner alight and at its highest setting. See Lighting Instructions section for full operating details on page 41.

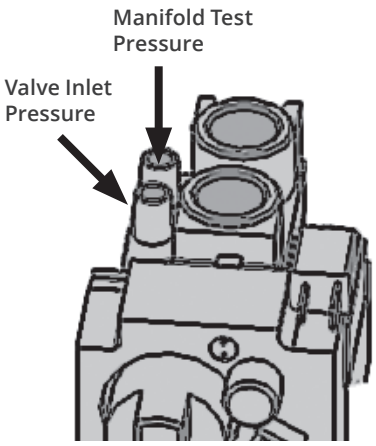

Alternate Inlet Connection

In cases where local codes do not permit the flex connector to be used inside the appliance case, reconnect the flex connector outside of the appliance case. A cut-out is provided in the appliance case for this purpose.

Use common elbow and fittings (not supplied) to redirect the position of the flex connector. NOTE: the flex connector bend radius must be no smaller than the size of a golf ball (approx. 1-3/4" or 44 mm).

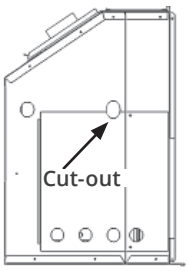

1. Remove flex pipe from elbow.

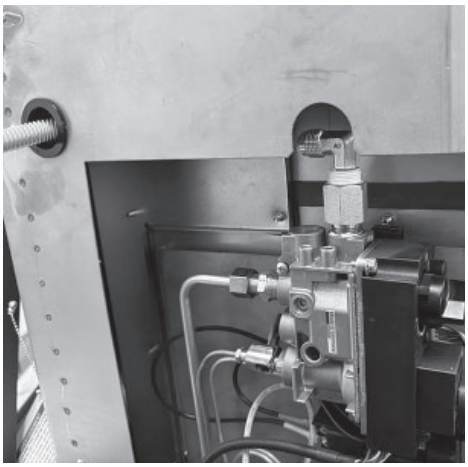

2. Remove elbow.

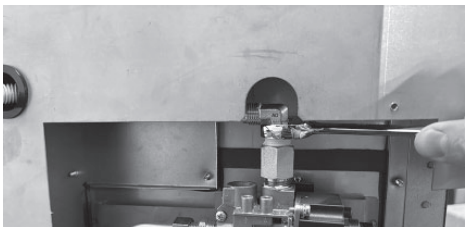

3. Install new inlet elbow.

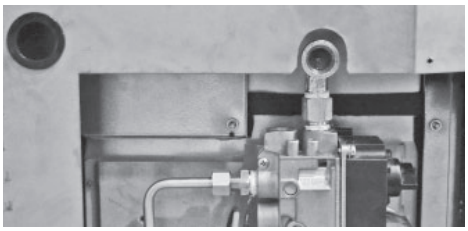

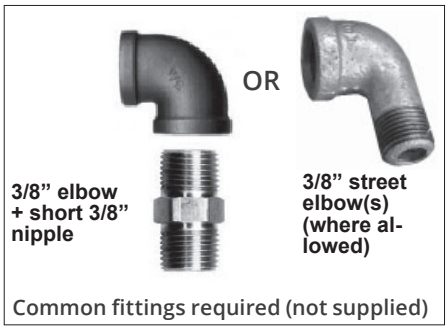

Option 1

4. Add straight flared connector (not supplied) to new elbow and fit flex connector. Close the access panel.

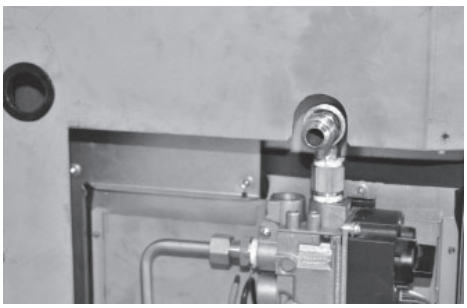

Flex connector redirected using one elbow.

Top view, left side

Front view, left side

Option 2

4. Add another elbow, the flared connector and refit the flex connector. Direct it towards the rear of the appliance or downward.
   Close the access panel.

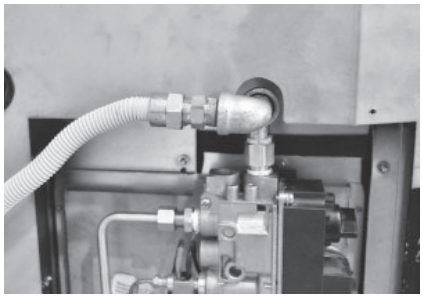

Flex connector redirected using two elbows.

Install Liners

The following guidelines apply for all liners (**with the exception of the 787RGL Reflective Glass Liners**—see the installation manual supplied with that liner kit for details).

1. Inside the firebox, on the top of each side, loosen (but do not remove) the screw of the side panel anchors if necessary so they can rotate freely (one per side).

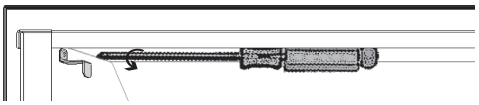

2. Remove the burner cover plate (2 screws at rear). Lift the front edge up and pull the plate toward you.

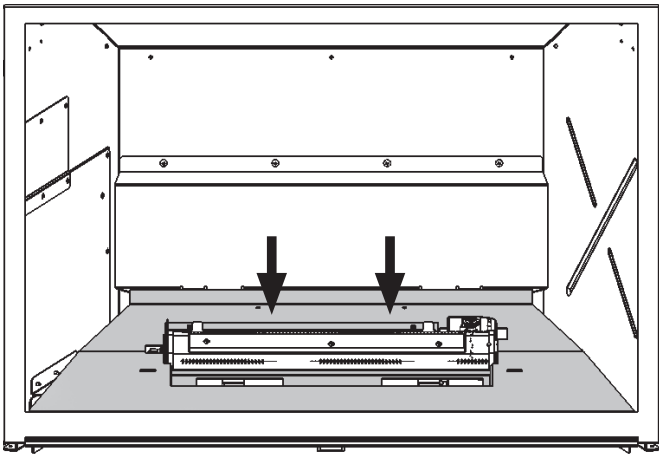

3. Place the left side panel as shown. Rotate the left clip at the top over the panel to hold it in place.

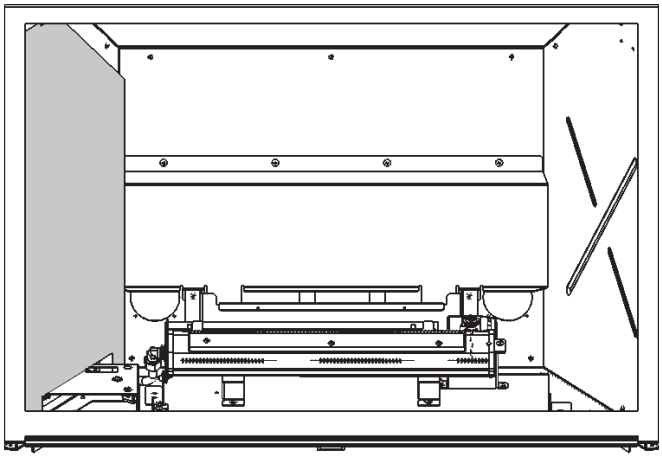

4. Place the rear panel as shown. It should slide gently behind the left panel.

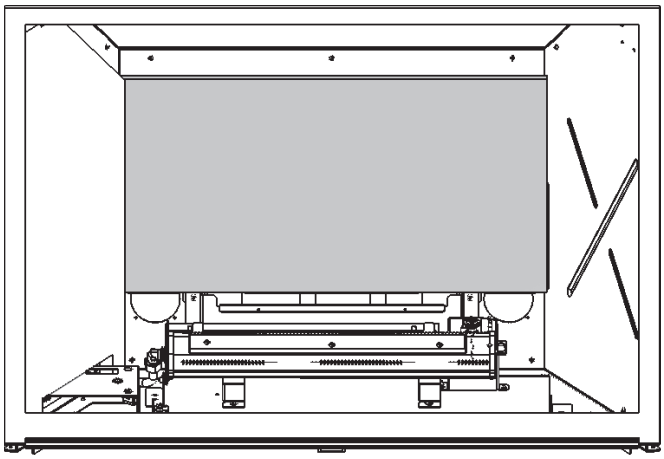

5. Place the right panel as shown. Note to take care around the bottom rear right corner as it is a close fit. Rotate the right clip at the top of the panel to hold it in place.

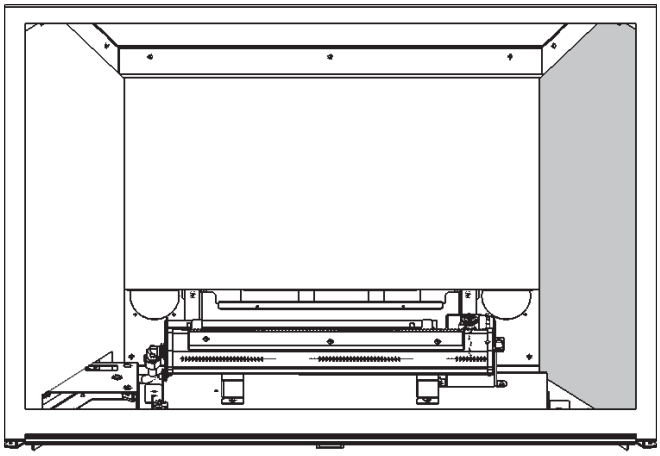

6. Place the top panel as shown.Insert one side with the panel near the front, place the second side, and slide the panel to the rear of the unit, resting it on the rear panel.

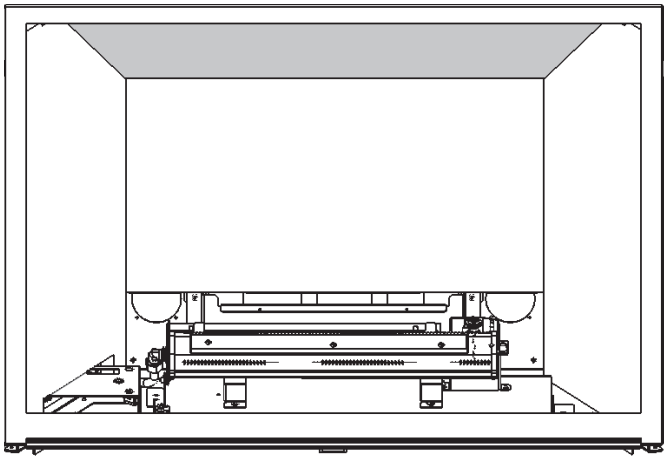

7. Replace the burner cover. Place the rear end of the cover first and drop the front of the cover down. Replace the 2 screws at rear.

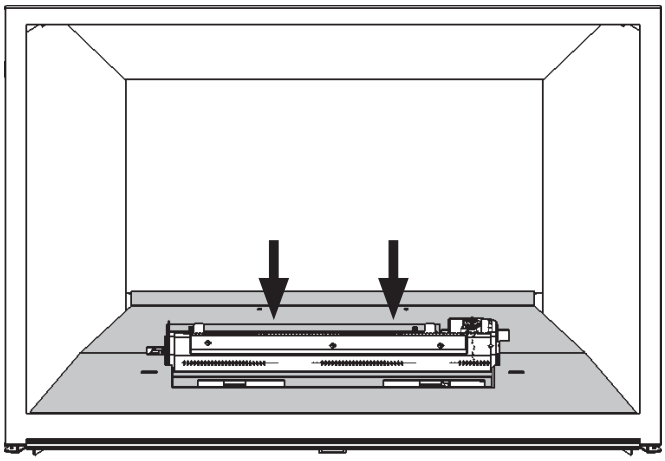

8. Place the left and right base panels at the front of the unit. **These are included with the fireplace.** These will be needed to be installed for all fuel beds.

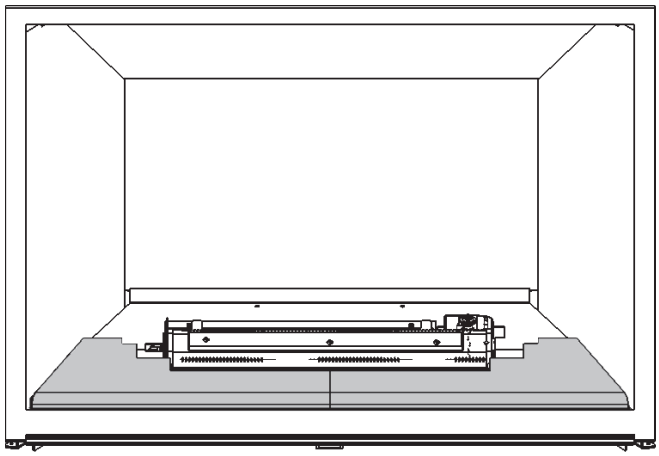

The base panels come packed with a rectangular cover plate measuring 1-1/2"x14-3/8". This plate is only used with the 1000DWKV2 Driftwood Log Kit (see page 28). If using the 1000BLKV2 (Birch) or 1000LSKV2 (Traditional) log kits, recycle this plate.

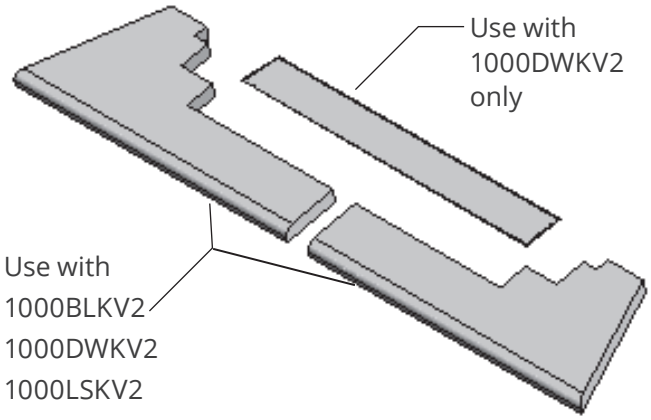

Installation

Birch Log Kit 1000BLKV2

Material required

- Birch Log Kit, which contains:
  - 10 logs
  - 2 cups of embers, bagged
- Gloves, if desired (not included)

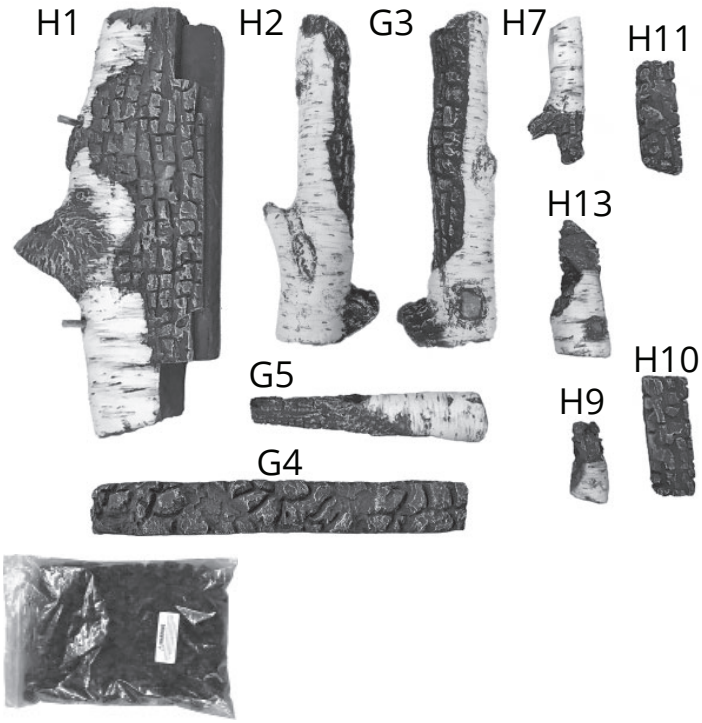

Installation

Carefully unpack the kit. Note each log has its own number stamped on the bottom. Some logs have pegs to help you place them on the burner platform, or other logs.

Install the logs as shown below.

1. Place emberbed G4 directly on the burner, its underside groove fitting on the front raised flange of the burner. Slide the log all the way to the left.

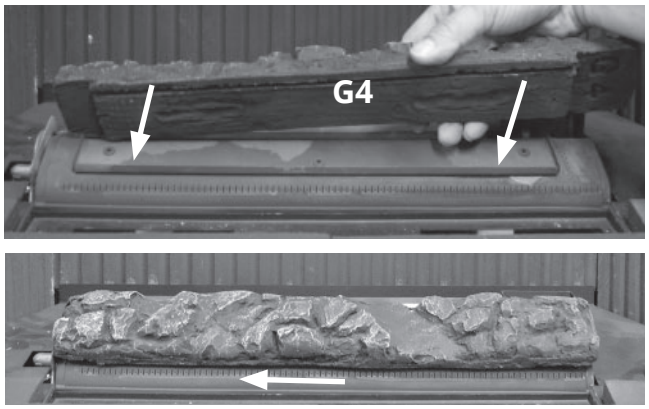

2. Place log H10 into the left hole in the front of the burner cover.

3. Place log H11 into the right hole in the front of the burner cover. Note the angled feature of H11 should be pointed to the right side.

4. Place log H1 onto the rear support bracket, and slide it as far to the right as it will travel, gently resting the log against the pilot shield.

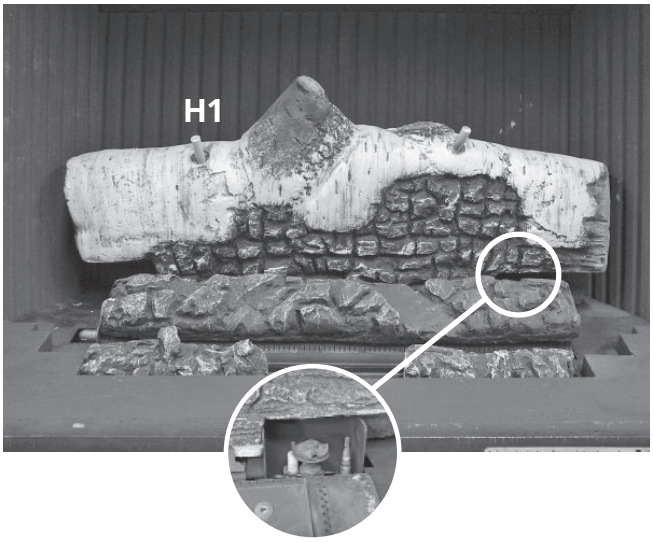

5. Place log H13 at the right end of G4, on top of H11.

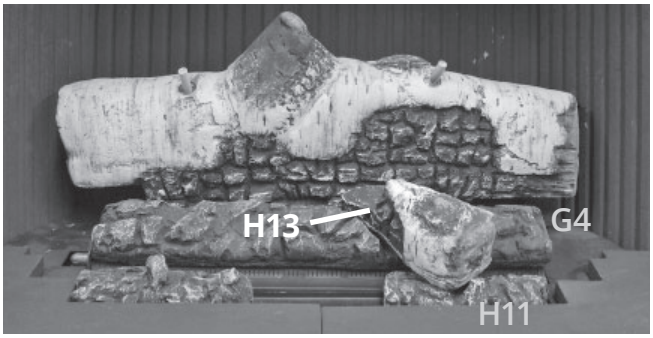

6. Place log G5 from the groove in H10 to the groove in H13.

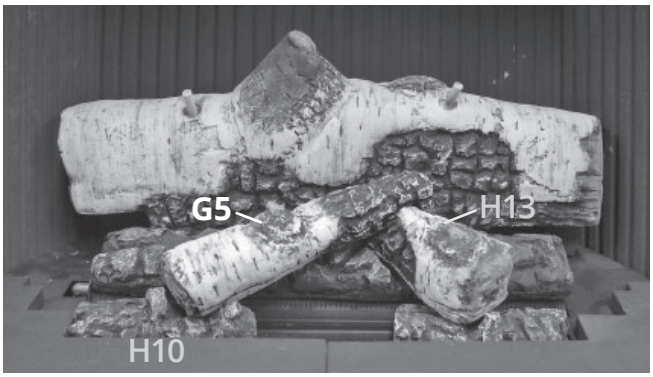

7. Place log H7 from the left side of G4 to the top groove of G5.

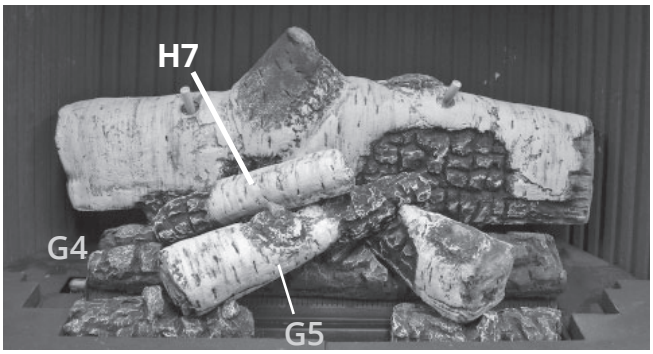

8. Place log G3 inserting H1's pin into G3's hole as shown.

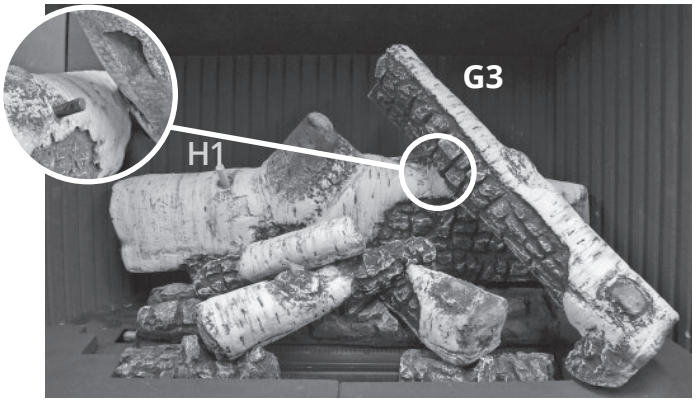

9. Place log H2 inserting H1's pin into H2's hole as shown.

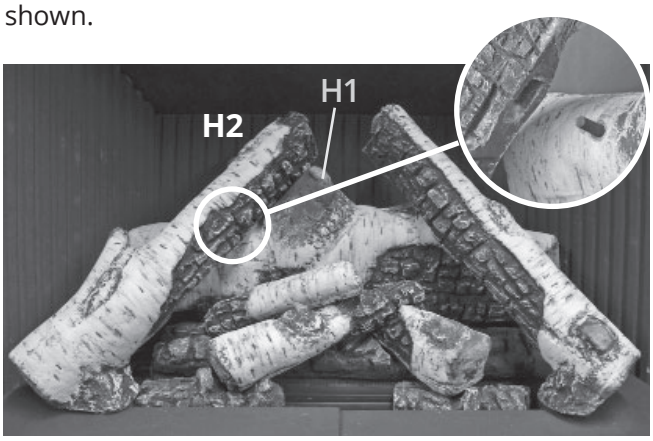

10. Place log H9 in the cavity between H10 and H11.

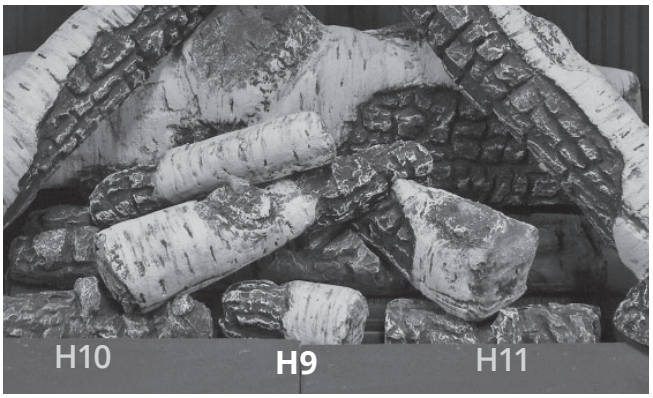

11. Place embers around H9 and at the base of G3 and H2 as shown, as desired. You may not need to use all the embers.

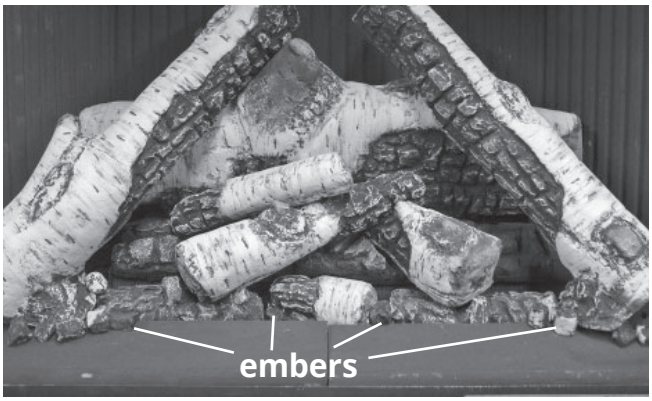

1000BLKV2 Birch Logs installed

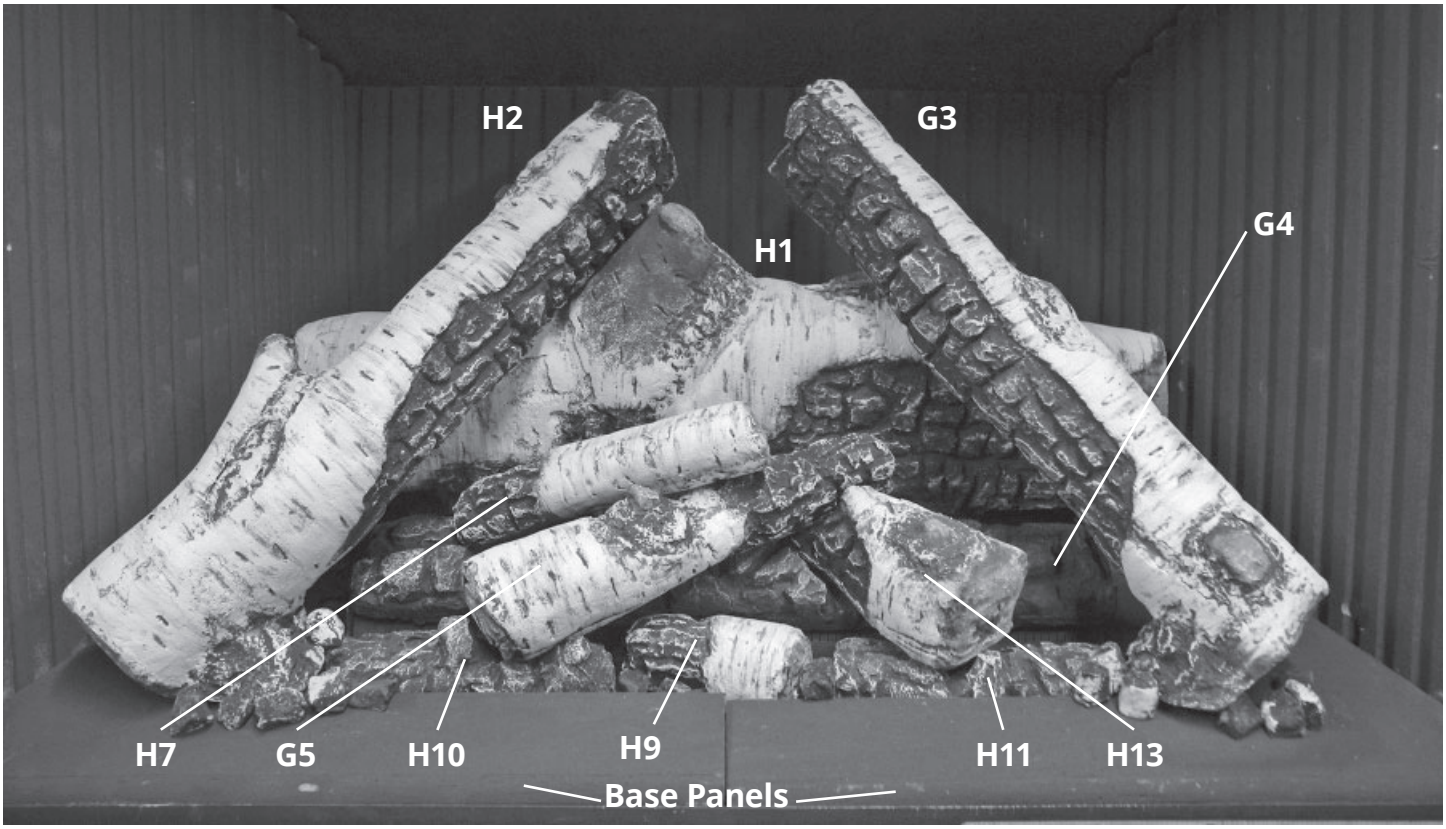

IMPORTANT

Approved for use only with the ceramic embers provided with your Valor fireplace. The use of any other products may void your fireplace warranty.

⚠ WARNING

Choking Hazard! Ensure that the fireplace area is clear of embers as these could be ingested by small children. Vacuum area after installation.

Installation

Driftwood Kit 1000DWKV2

Material required

- Driftwood Log Kit, which contains:
  - 8 logs
  - 3 pebbles
  - 2 cups of embers, bagged
- 1 cover plate, supplied with appliance
- Gloves, if desired (not included)

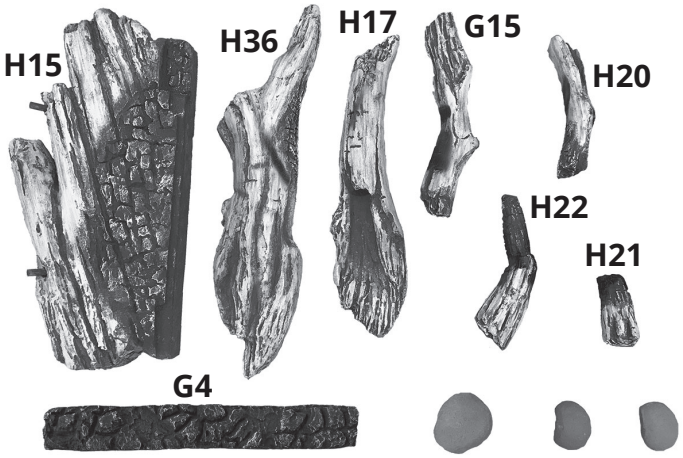

Installation

Carefully unpack the kit. Note each log and pebble has its own number stamped on the bottom. Some logs have pins and holes to help you place them on the burner platform, or other logs.

Install the logs as shown below.

1. Place the cover panel into the recess in front of the burner.

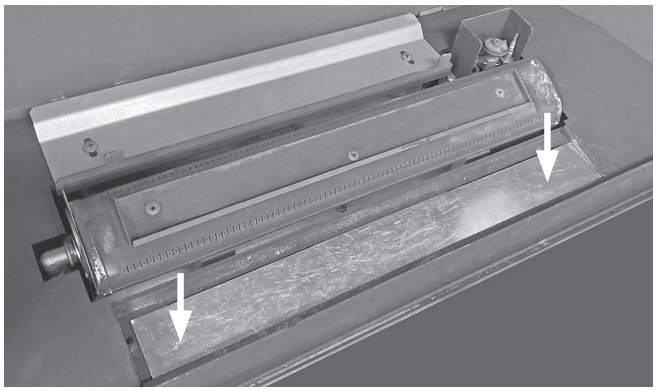

2. Place log G4 directly on the burner, its underside groove fitting on the front raised flange of the burner. Slide the log all the way to the left.

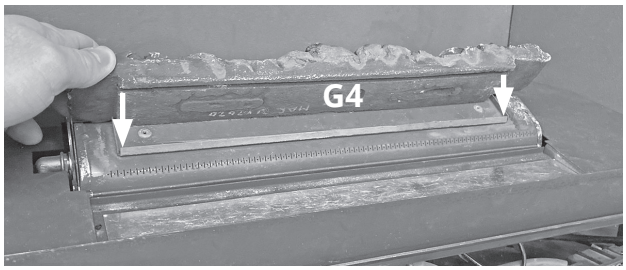

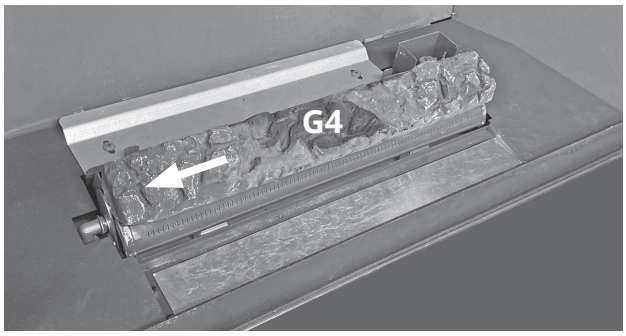

3. Place log H15 onto the rear support bracket, and slide it as far to the right as it will travel, gently resting the log against the pilot shield.

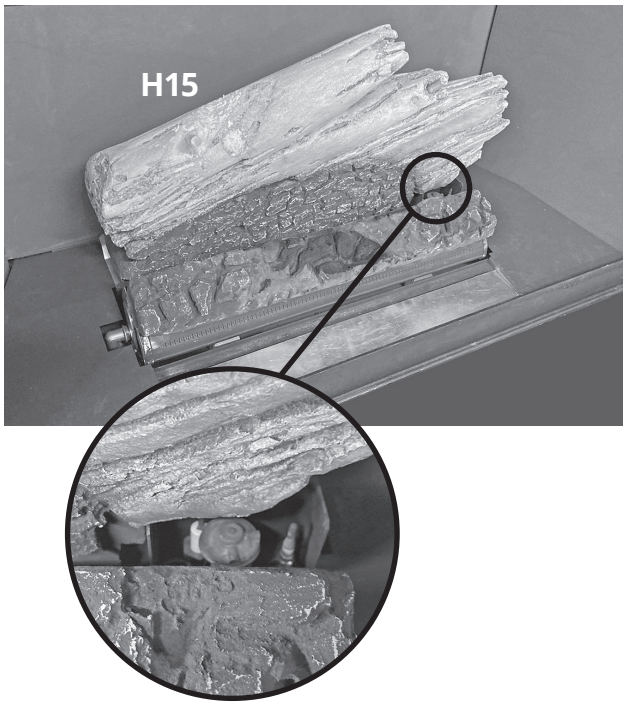

4. Place log H22 at the right end of G4, on top of the cover panel.

5. Place log G15 from the cover panel to the groove in H22.

6. Place log H20 from the left side of G4 to the top groove of G15.

7. Place log H17 as shown. Note the hole in H17 fits onto the pin in H15.

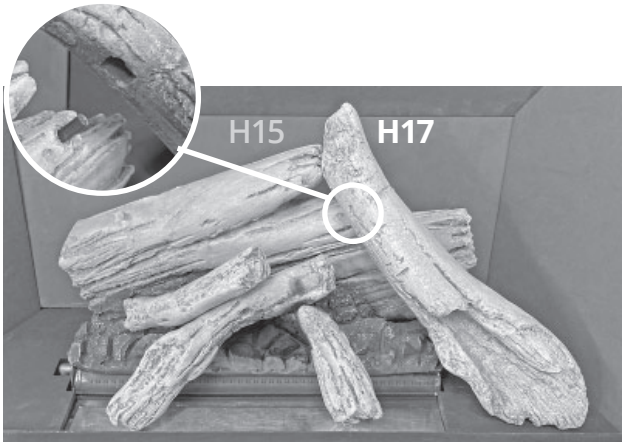

8. Place log H36 as shown. Note the hole in H36 fits onto the pin in H15.

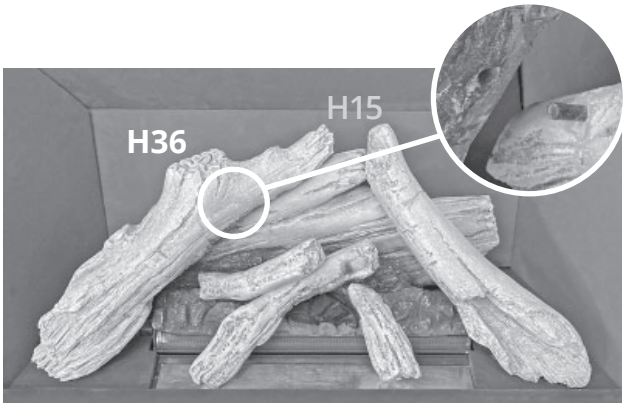

9. Place embers as shown on the cover plate. You may not need to use all the embers.

10. Place log H21 on top of the embers between G15 and H22.

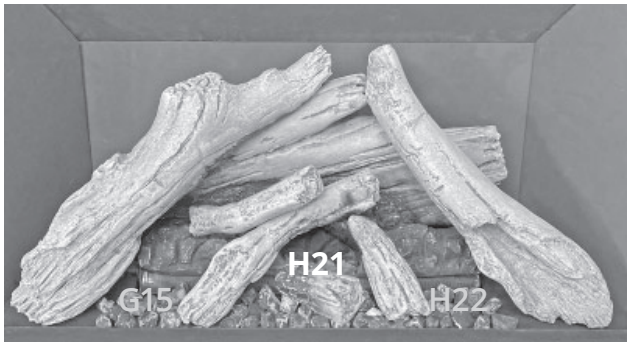

11. Place pebbles as desired.

IMPORTANT

Approved for use only with the ceramic embers provided with your Valor fireplace. The use of any other products may void your fireplace warranty.

⚠ WARNING

Choking Hazard! Ensure that the fireplace area is clear of embers as these could be ingested by small children. Vacuum area after installation.

1000DWKV2 Driftwood Kit installed

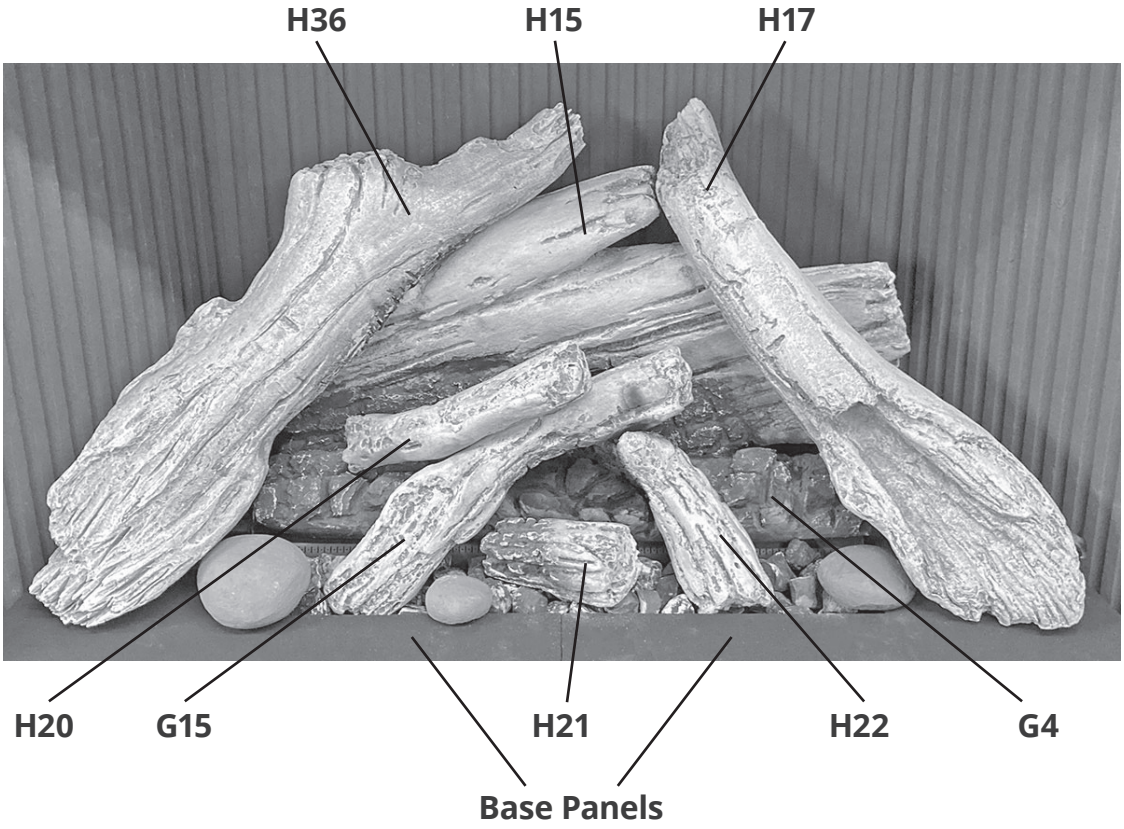

Installation

Traditional Log Kit 1000LSKV2

Material required

- Traditional Log Kit, which contains:
  - 10 logs
  - 2 cups of embers, bagged
- Gloves, if desired (not included)

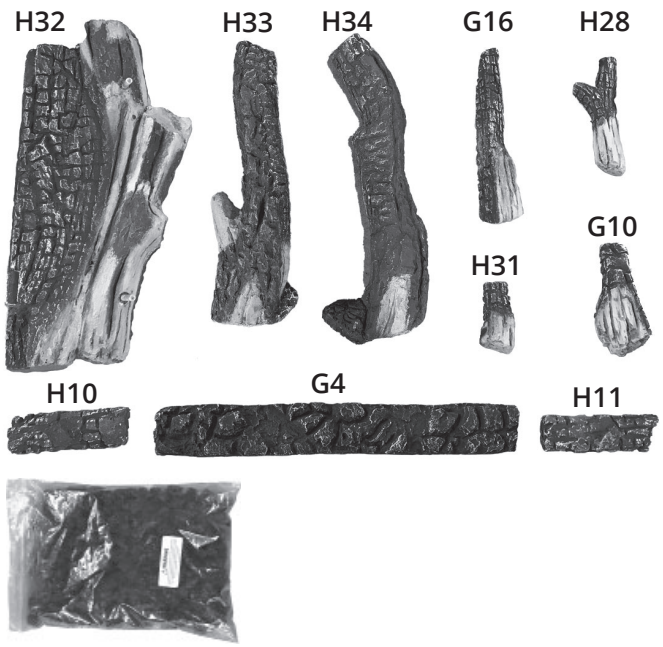

Installation

Carefully unpack the kit. Note each log has its own number stamped on the bottom. Some logs have pegs to help you place them on the burner platform, or other logs.

Install the logs as shown below.

1. Place emberbed G4 directly on the burner, its underside groove fitting on the front raised flange of the burner. Slide the log all the way to the left.

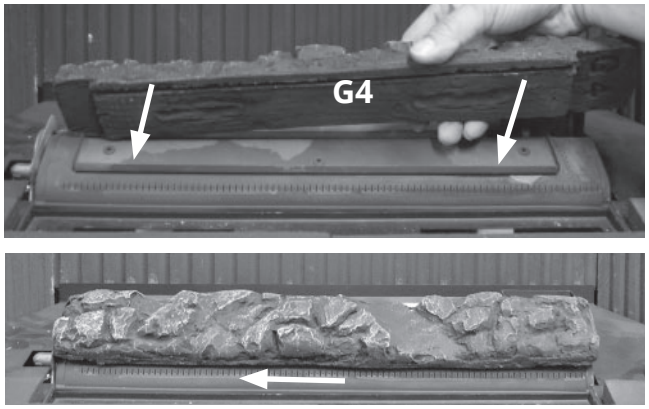

2. Place log H10 into the left hole in the front of the burner cover.

3. Place log H11 into the right hole in the front of the burner cover. Note the angled feature of H11 should be pointed to the right side.

4. Place log H32 onto the rear support bracket, and slide it as far to the right as it will travel, gently resting the log against the pilot shield.

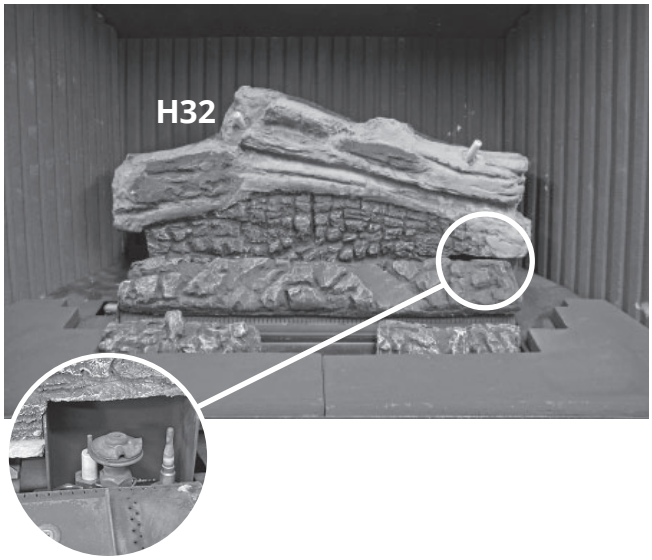

5. Place log G10 at the right end of G4, on top of H11.

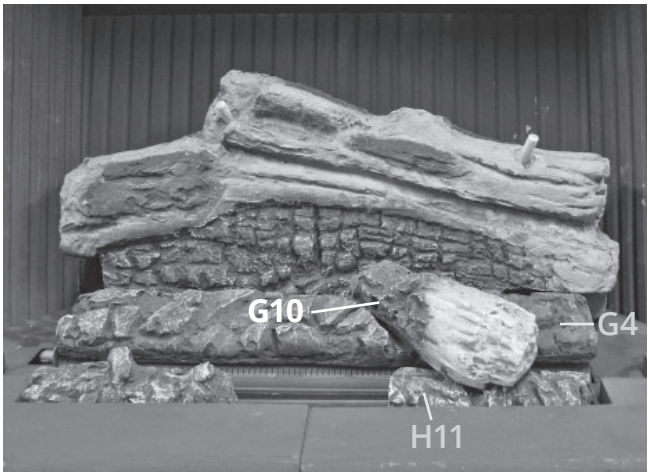

6. Place log G16 from the groove in H10 to the groove in G10.

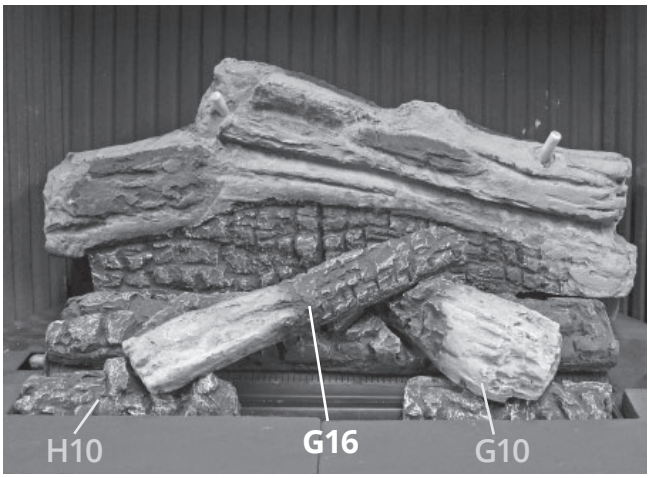

7. Place log H28 from the left side of G4 to the top of G16.

8. Place log H34 inserting H32's pin into H34's hole as shown.

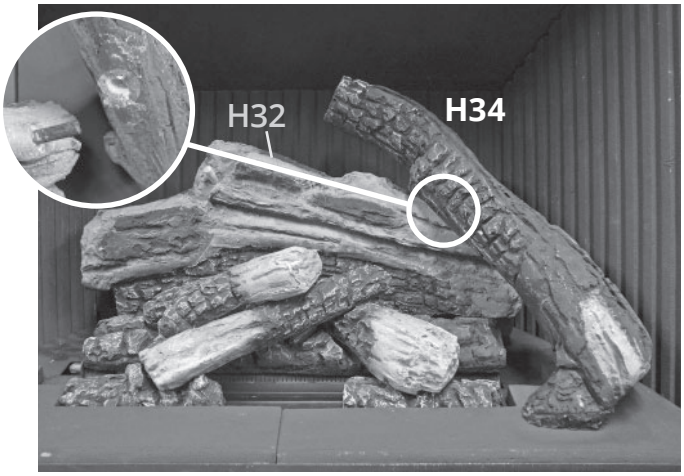

9. Place log H33 inserting H32's pin into H33's hole as shown.

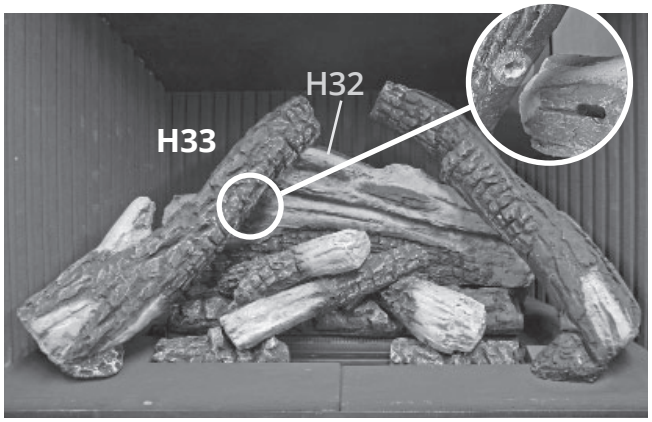

10. Place log H31 in the cavity between H10 and H11.

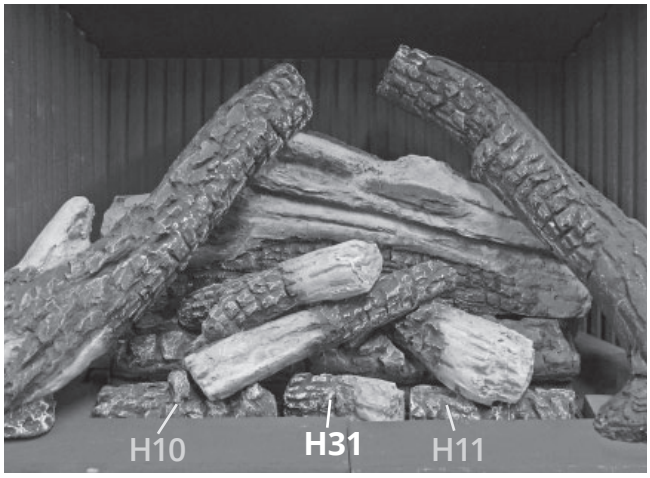

11. Place embers as shown, around H31 and the base of H34 and H33 as desired. You may not need to use all the embers.

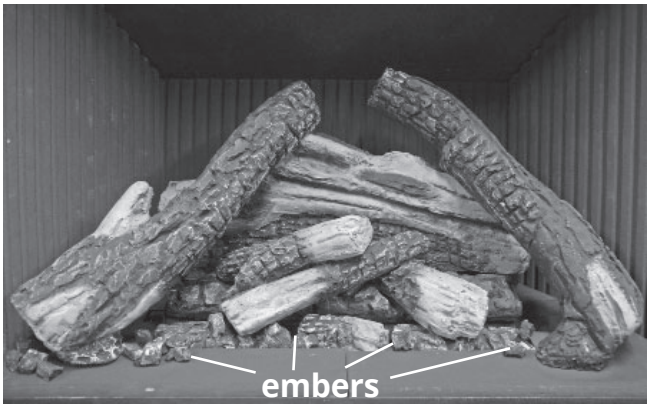

1000LSKV2 Traditional Logs installed

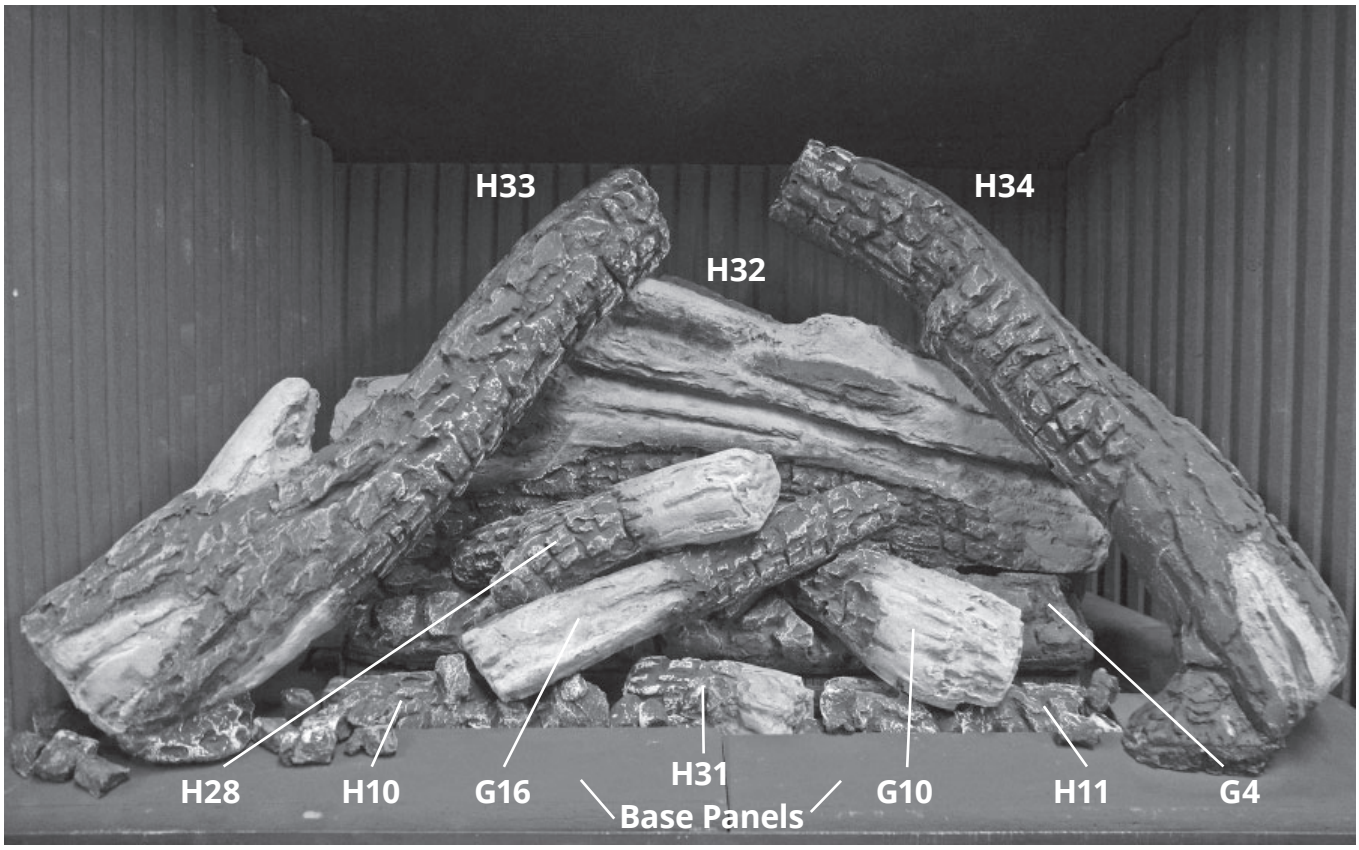

IMPORTANT

Approved for use only with the ceramic embers provided with your Valor fireplace. The use of any other products may void your fireplace warranty.

⚠ WARNING

Choking Hazard! Ensure that the fireplace area is clear of embers as these could be ingested by small children. Vacuum area after installation.

Refit and Check Window

1. Place the window in its bottom railing and push its top against the firebox. **Ensure to remove any particles in the railing before installing the window.**

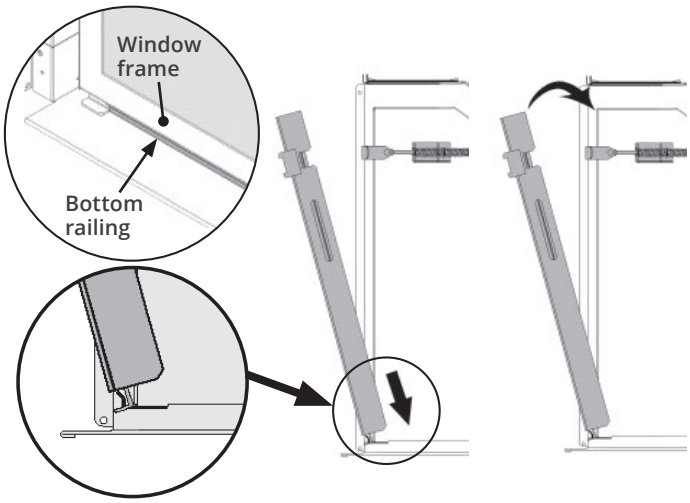

2. While you hold it, hook the side levers into the window tabs.

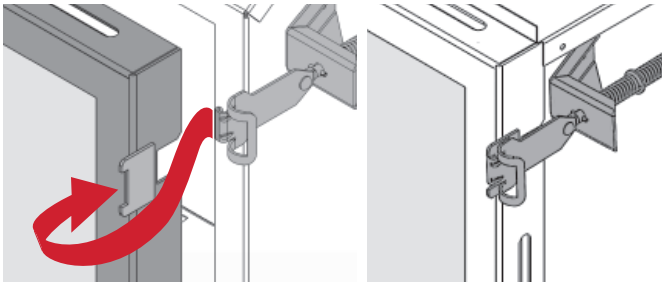

3. Pull out the top of the window and release it to ensure the springs return it.
4. Apply firm hand pressure around the window frame to ensure the window is sealed tight against the firebox.
5. If the Hot Glass Warning plate has been removed from the front lower corner of the window, reinstall it by sliding it between the glass and the frame as indicated below.

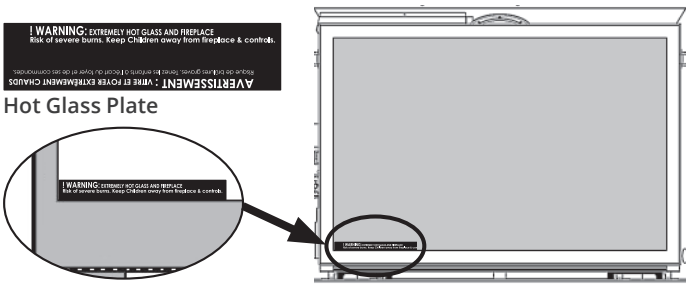

⚠ WARNING

The window unit must be correctly installed, fastened and sealed after servicing or serious bodily injury and/or damage to the appliance may result.

To ensure a safe operation:

- **Double-check that the bottom of the window frame is correctly installed in the bottom support railing;**
- **Verify that the levers are hooked properly to the window tabs then;**
- **Pull out the top of the window and release it to ensure the springs return it;**
- **Ensure the window is sealed before operation.**

⚠ WARNING

Failure to install the window correctly can:

- **Leak carbon monoxide.**
- **Affect the performance of the fireplace.**
- **Damage components.**
- **Cause overheating resulting in dangerous conditions.**

Damage caused by incorrect window installation is not covered by the Valor Warranty.

Synchronize Remote Control

The remote control system's receiver and handset must be initially synchronized before the first use.

1. Remove the battery holder cover (1 screw). Insert 4 x AA 1.5V alkaline batteries in the holder.

2. On the left hand side of the firebox, pull the loose wire that is already connected to the receiver and connect it to the battery holder.

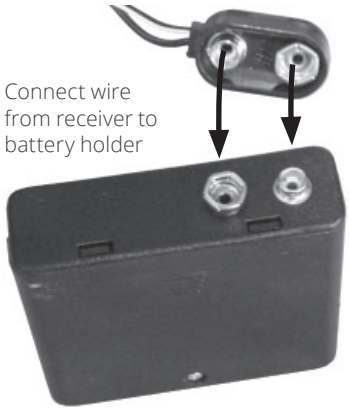

3. Insert 2 x AAA 1.5 V alkaline battery in the handset.
4. Locate the RESET button on the receiver.
5. With a sharp object, press and hold the receiver's RESET button until you hear one short and one long beep. Release the reset button after the second beep.

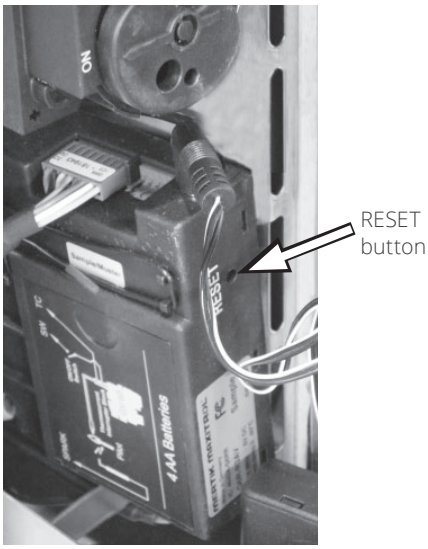

6. Within the subsequent 20 seconds, press and hold the ▼ button on the remote handset for 2-3 seconds. COM will be displayed and flash on the handset during the pairing sequence. The handset will count up from 1 to 8, and you will hear two short beeps confirming the pairing is done.

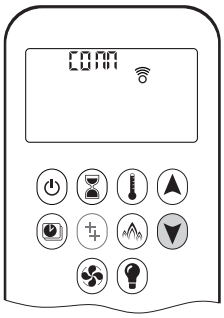

If you hear one long beep, the pairing sequence has failed or the wiring is incorrect.

This is a one time setting only and is not required when changing the batteries in the remote handset. The remote control system is now ready to use.

7. Inside the left panel of the appliance outer case, in front of the receiver, peel off the *Velcro* backing and stick the battery box on it to keep it in place.

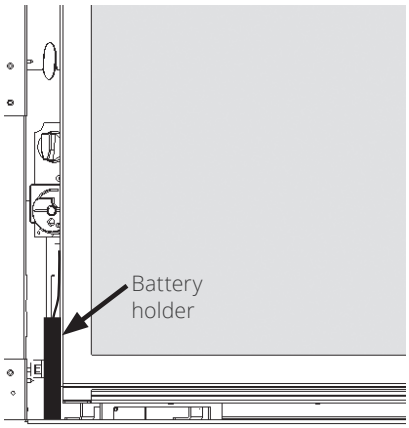

Installation

⚠ WARNING

Do not operate this appliance with the glass front removed, cracked, or broken.

The glass front assembly MUST be in place and sealed before the unit can be placed into safe operation.

IMPORTANT

The fireplace window MUST be installed before checking the operation, system verification, gas purging and handing over to the customer to ensure the appliance functions as intended and prevent reverse venting and other malfunctions.

Check Operation

Turn the fireplace flame up and down using the remote control to confirm that the full range of inputs is achieved—see "Appendix B–Remote Control Operation" on page 42.

Adjust Aeration (if necessary)

With the window installed, light the fire and allow the unit to warm up for 10–15 minutes to evaluate the flame picture. Burners are equipped with an adjustable shutter to control primary aeration. See the figures below. The shutters are factory-set to an aeration gap which will give optimum performance for the vast majority of installations.

Depending of fuel bed used, altitude and other considerations, the flame picture may be improved by adjusting the aeration. The need for adjustment should be determined only by operating the appliance with the fuel bed, liners and window installed and evaluating the flame picture after a 15-minute warm-up.

Check Operation and Aeration

Pull or push the aeration lever at the bottom front left corner of the unit to open or close the air shutter. The shutter is visible at the left hand end of the burner.

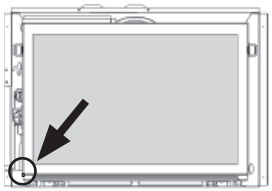

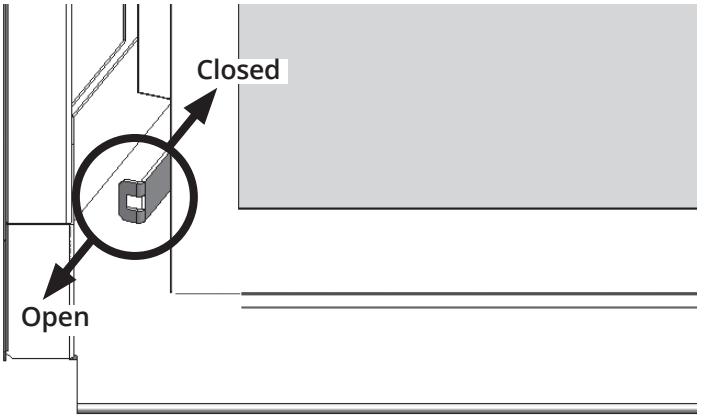

Increasing aeration (open) will cause the flames to appear more transparent and blue showing more ceramic effects glow.

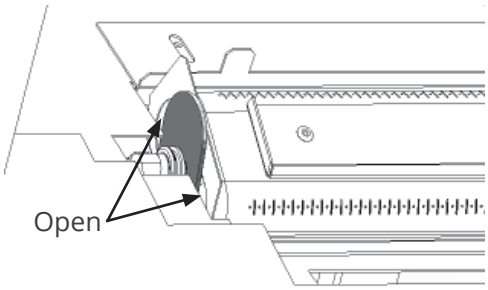

Decreasing aeration (close) will cause the flames to appear more yellow or orange showing less ceramic effects glow.

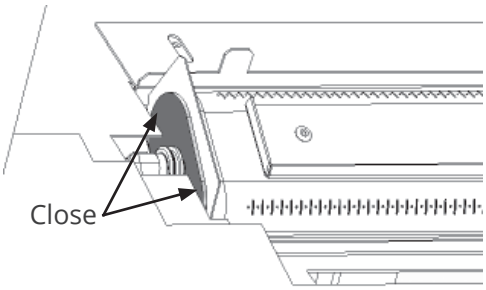

Too little aeration may result in black carbon forming on the logs or roof panel and dropping into the firebox. May also result in carbon or soot stains on the vent termination and exterior wall around the termination! The Manufacturer is not responsible for any damage caused by an air shutter setting with too little aeration.

Install Side Shrouds

The side shrouds are required to install the front on the appliance. They are supplied with the engine.

Fit them to the appliance outer case as indicated (2 screws/side).

See instructions supplied with the front trim for installation of trim.

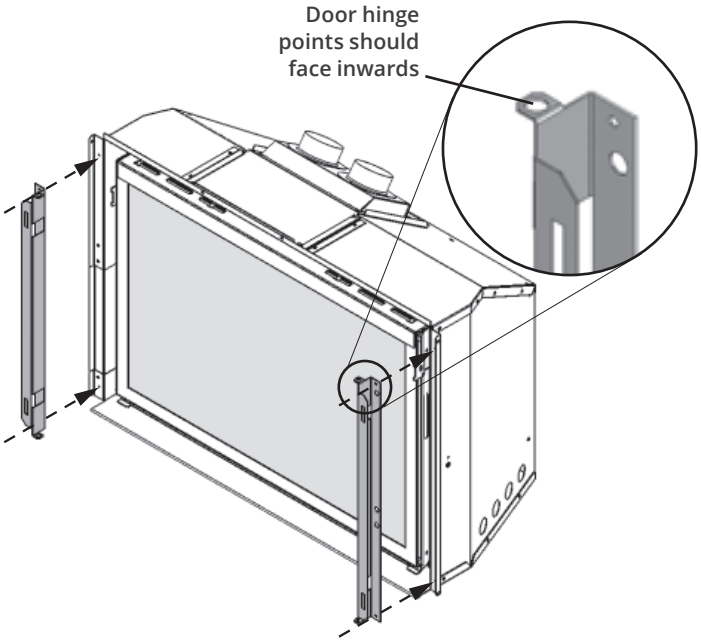

Install Front, Trim and Barrier Screen

Install the front or trim chosen by the customer for their fireplace. Install as well the barrier screen which is provided with the front or trim.

Show the customer how to access the controls when the front or trim are installed and how to remove them.

Follow the instructions provided with the front or trim and leave those instructions behind for the customer's further reference.

Install Remote Control Handset Wall Holder

The remote control kit for this fireplace comes complete with a wall-mounted holder. This holder is not required in all installations but is provided as an optional feature for those customers who wish to mount the remote handset to the wall.

To install the holder to the wall, find a convenient location and use the hardware provided with the kit. Cover the screws with the included caps to finish the mounting.

Once mounted, the holder is magnetic - simply place the remote gently into the holder.

IMPORTANT: The location of the remote control handset is important to assure proper temperature regulation. To obtain a constant temperature, we recommend that the handset should be **between 3 and 15 feet away from the appliance but not directly above it**. We also advise that the handset should be located away from any other heat source and not in direct sunlight as this may affect the temperature sensor located in the remote handset.

Wiring Diagram

GV60 Wiring Diagram

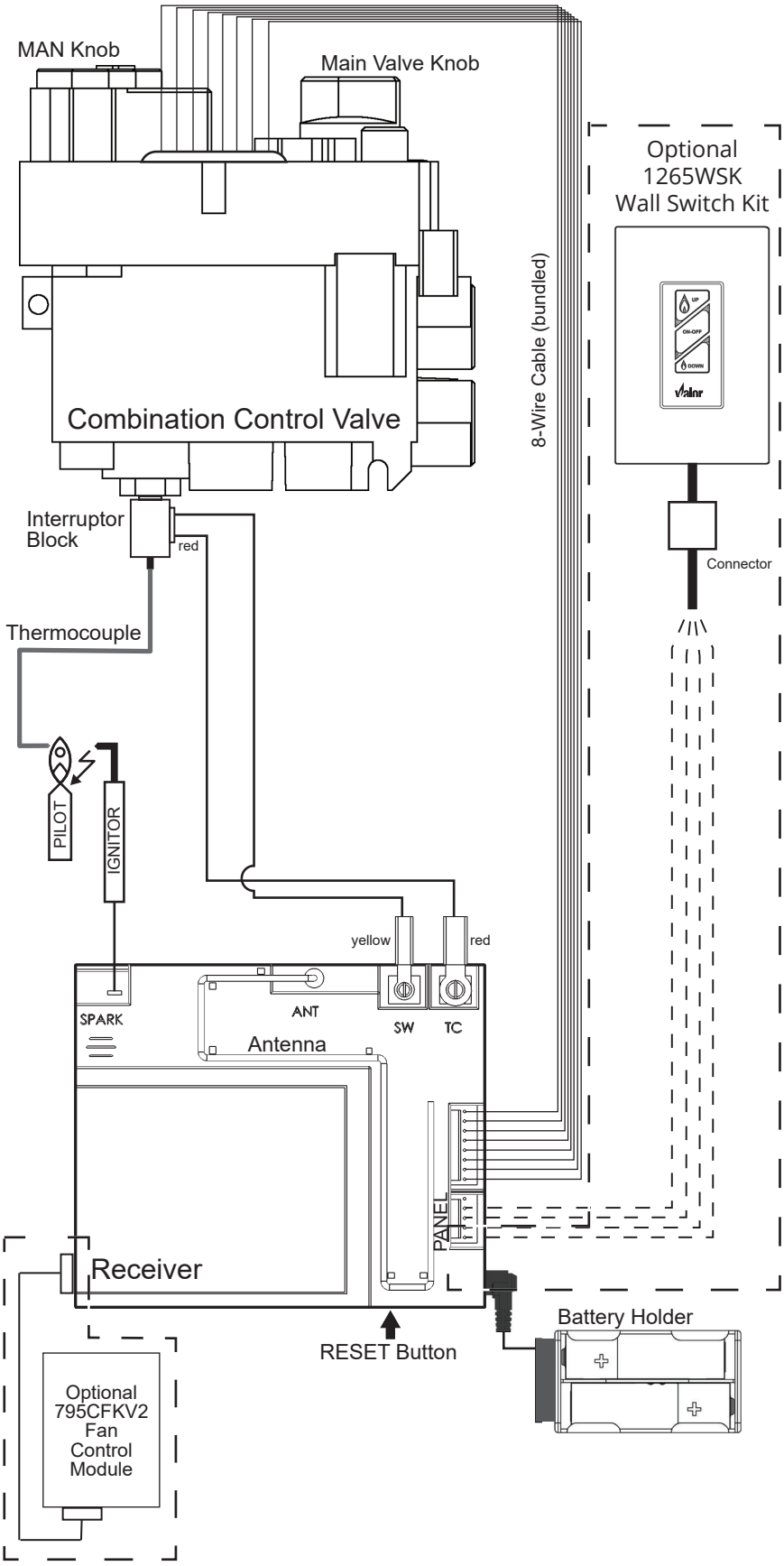

⚠ WARNING

NO ELECTRICAL CONNECTION ALLOWED for any outdoor installation!

Commonwealth of Massachusetts

State of Massachusetts Carbon Monoxide Detector/Vent Terminal Signage Requirements

For all side wall horizontally vented gas fueled equipment installed in every dwelling, building or structure used in whole or in part for residential purposes, including those owned or operated by the Commonwealth and where the side wall exhaust vent termination is less than seven (7) feet above finished grade in the area of the venting, including but not limited to decks and porches, the following requirements shall be satisfied:

1. INSTALLATION OF CARBON MONOXIDE DETECTORS. At the time of installation of the side wall horizontal vented gas fueled equipment, the installing plumber or gas fitter shall observe that a hard wired carbon monoxide detector with an alarm and battery back-up is installed on the floor level where the gas equipment is to be installed. In addition, the installing plumber or gas fitter shall observe that a battery operated or hard wired carbon monoxide detector with an alarm is installed on each additional level of the dwelling, building or structure served by the side wall horizontal vented gas fueled equipment. It shall be the responsibility of the property owner to secure the services of qualified licensed professionals for the installation of hard wired carbon monoxide detectors.

a. In the event that the side wall horizontally vented gas fueled equipment is installed in a crawl space or an attic, the hard wired carbon monoxide detector with alarm and battery back-up may be installed on the next adjacent floor level.

b. In the event that the requirements of this subdivision can not be met at the time of completion of installation, the owner shall have a period of thirty (30) days to comply with the above requirements; provided, however, that during said thirty (30) day period, a battery operated carbon monoxide detector with an alarm shall be installed.

2. APPROVED CARBON MONOXIDE DETECTORS. Each carbon monoxide detector as required in accordance with the above provisions shall comply with NFPA 720 and be ANSI/UL 2034 listed and IAS certified.

3. SIGNAGE. A metal or plastic identification plate shall be permanently mounted to the exterior of the building at a minimum height of eight (8) feet above grade directly in line with the exhaust vent terminal for the horizontally vented gas fueled heating appliance or equipment. The sign shall read, in print size no less than one-half (1/2) inch in size, “GAS VENT DIRECTLY BELOW. KEEP CLEAR OF ALL OBSTRUCTIONS”.

4. INSPECTION. The state or local gas inspector of the side wall horizontally vented gas fueled equipment shall not approve the installation unless, upon inspection, the inspector observes carbon monoxide detectors and signage installed in accordance with the provisions of 248 CMR 5.08(2)(a)1 through 4.

(b) EXEMPTIONS: The following equipment is exempt from 248 CMR 5.08(2)(a)1 through 4:

1. The equipment listed in Chapter 10 entitled “Equipment Not Required To Be Vented” in the most current edition of NFPA 54 as adopted by the Board; and

2. Product Approved side wall horizontally vented gas fueled equipment installed in a room or structure separate from the dwelling, building or structure used in whole or in part for residential purposes.

(c) MANUFACTURER REQUIREMENTS - GAS EQUIPMENT VENTING SYSTEM PROVIDED. When the manufacturer of Product Approved side wall horizontally vented gas equipment provides a venting system design or venting system components with the equipment, the instructions provided by the manufacturer for installation of the equipment and the venting system shall include:

1. Detailed instructions for the installation of the venting system design or the venting system components; and

2. A complete parts list for the venting system design or venting system.

(d) MANUFACTURER REQUIREMENTS - GAS EQUIPMENT VENTING SYSTEM NOT PROVIDED. When the manufacturer of a Product Approved side wall horizontally vented gas fueled equipment does not provide the parts for venting the flue gases, but identifies “special venting systems”, the following requirements shall be satisfied by the manufacturer:

1. The referenced “special venting system” instructions shall be included with the appliance or equipment installation instructions; and

2. The “special venting systems” shall be Product Approved by the Board, and the instructions for that system shall include a parts list and detailed installation instructions.

(e) A copy of all installation instructions for all Product Approved side wall horizontally vented gas fueled equipment, all venting instructions, all parts lists for venting instructions, and/or all venting design instructions shall remain with the appliance or equipment at the completion of the installation.

Appendix A–Lighting Instructions Plate

FOR YOUR SAFETY, READ BEFORE LIGHTING

WARNING: If you do not follow these instructions exactly a fire or explosion may result causing property damage, personal injury or loss of life.

A. This appliance has a pilot which must be lighted by hand or by remote control. Follow these instructions exactly. To save gas, turn the pilot off when not using the appliance for a prolonged period of time.

B. BEFORE LIGHTING, smell all around the appliance area for gas. Be sure to smell next to the floor because some gas are heavier than air and will settle on the floor.
WHAT TO DO IF YOU SMELL GAS

- Do not try to light any appliance.
- Do not touch any electric switch; do not use any phone in your building.
- Immediately call your gas supplier from a neighbor's phone. Follow the gas supplier's instructions.
- If you cannot reach your gas supplier, call the fire department.

C. Do not use this appliance if any part has been under water. Immediately call a qualified service technician to inspect the appliance and to replace any part of the control system and any gas control, which has been under water.

D. Use only your hand to push in or turn the control knobs. Never use tools. If the knobs will not push in or turn by hand, don't try to repair them; call a qualified service technician. Force or attempted repair may result in a fire or explosion.

OPERATING INSTRUCTIONS

1. STOP! Read the safety information above.
2. This appliance is equipped with an on-demand pilot that shuts off after 7 days of inactivity.
3. TO CLEAR ANY GAS, turn main valve off by momentarily pressing OFF button (●) (1a) or (⏻) button (1b) on remote control handset.
   - Wait five (5) minutes to clear out any gas, then smell for gas, including near the floor.
   If you smell gas, STOP! Follow "B" in the safety information above on this label.
   If you don't smell gas, go to the next step.
4. AUTOMATIC IGNITION: MAN-knob in ON position (Fig. 2, A). (Ensure gas control knob is set to OFF (full clockwise ↻)(Fig. 2, B). Locate the pilot inside firebox (Fig. 4).
   - On the remote control handset, press and hold simultaneously the OFF (●) and large flame (🔥) buttons (1a) OR, press and hold (⏻) button (1b); a short acoustic signal confirms the start has begun.
   - Further short acoustic signals indicate the ignition process is in progress.
   - When the pilot is lit, the gas control knob (Fig. 2, B) will automatically rotate to the highest setting. Press the small flame button (🔥) (1a) or down arrow (▼) (1b) on the remote to reduce flames.
5. MANUAL IGNITION: MAN-knob in MAN position (Fig. 3, A).
   With the window off, locate the pilot inside firebox (Fig. 4).
   - Set gas control knob to OFF (full clockwise ↻) (Fig. 3, B).
   - Push down the manual pilot plunger with a small screwdriver or similar instrument (Fig. 3, C); this will establish the pilot gas flow.
   - Light gas at the pilot with a match (Fig. 4, 5).
   - Continue holding down manual pilot plunger for about 10 seconds (Fig. 3, C); after release, pilot should remain lit.
   - If the pilot will not stay lit after several tries, turn the gas control knob to OFF (full clockwise ↻) (Fig. 3, B) and call your local service technician or gas supplier.
   - Once the pilot is lit, reinstall the window and set the MAN-knob to ON (full counter-clockwise ↺)(Fig. 2, A); turn gas control knob up (↺) or down(↻) manually (Fig. 2, B) or use the flame buttons (🔥) (🔥) (1a) or arrow buttons (▼) (▲) (1b) on the remote control handset to adjust the flame height.

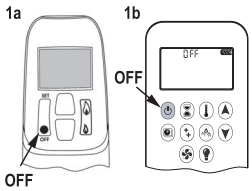

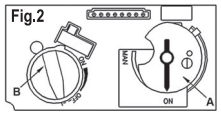

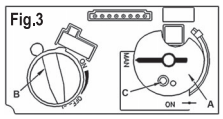

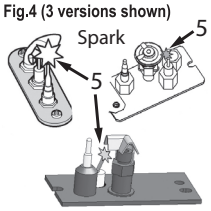

TO TURN OFF GAS TO APPLIANCE

AUTOMATIC SHUT-OFF (using the remote control handset):
Press and hold the small 🔥 button (1a) or (▼) button (1b) to shut-off the main burner gas flow.
Momentarily press the "OFF" ● button (1a) or (⏻) button (1b) on remote handset to shut-off the appliance, including pilot flame.

DO NOT REMOVE FROM FIREPLACE

4009565-01

Appendix B–Remote Control Operation

Initial Pairing

Before the remote control can be used with the fireplace, it must be paired. See page 35.

Main Display and Remote Handset

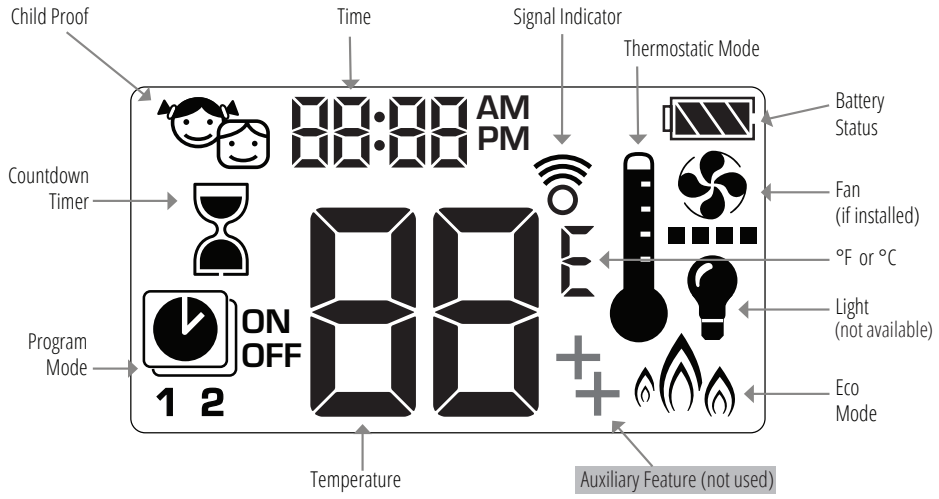

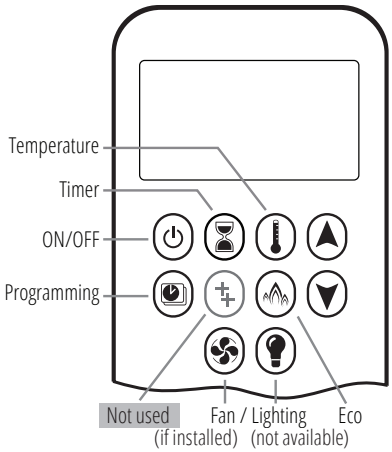

To Turn On Fire

NOTE: When pilot ignition is confirmed, motor automatically turns to maximum flame height.

One-Button lighting (default): ⏻
Two-Button lighting: ⏻ + ▲ simultaneously

Press and hold for 4 seconds, until 8 short beeps and a blinking series of lines confirms the start sequence has begun. Release button.

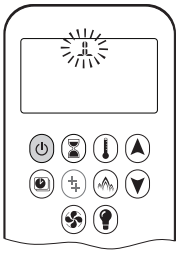

Main gas flows once pilot ignition is confirmed.

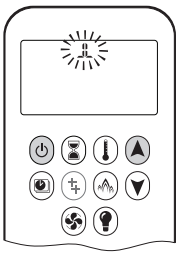

Handset automatically goes into manual mode after main burner ignition.

Standby Mode (Pilot Flame)

Press and hold ▼ to set appliance to pilot flame.

CAUTION: If the pilot does not stay lit after several tries call your local service technician or gas supplier.

To Turn Off Fire

Press ⏻ to turn OFF.

Note: There is a 2 minute delay after switching off before the next ignition is possible.

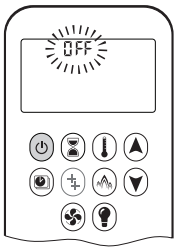

CAUTION: Always check the fire and pilot visually to ensure they are off.

Flame Height Adjustment

To increase flame height, press and hold ▲.

To decrease flame height, press and hold ▼. You may hold the button down until the fire is set to pilot flame only.

Appendix B–Remote Control Operation

Designated Low Fire and High Fire

To go to low fire, double-click ▼. "LO" is displayed.

Note: Flame goes to high fire first before going to low fire.

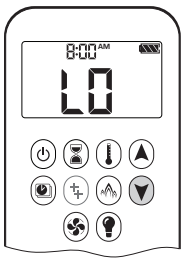

To go to high fire, double-click ▲. "HI" is displayed.

Choosing 1-Button or 2-Button Ignition

On the remote control handset, you can choose a 1-button or 2-button ignition. You can also choose to activate or deactivate some of the functions. By default, the handset is set to a 1-button ignition.

To change from 1-button to 2-button ignition, remove the batteries, wait 10 seconds, reinsert batteries, and immediately when the display flashes, press and hold the ⏻ button for 10 seconds. **ON** is displayed and **1** is flashing. When change is complete, **1** changes to **2**.

To change from 2-button to 1-button ignition, proceed the same as above. **ON** is displayed and **2** is flashing. When change is complete, **2** changes to **1**.

Deactivating or Activating Functions

These functions are active by default, but can be deactivated at any time:

- Child Proof
- Program Mode
- Thermostatic Mode
- Eco Mode
- Circulating Fan Operation
- Countdown Timer

> **NOTE:** The function Auxiliary Feature is not used.

To deactivate functions:

1. Install batteries. All icons are displayed and flashing.
2. While the icons are flashing, press the relevant function button and hold for 10 seconds.
3. The function icon will flash until deactivation is complete. Deactivation is complete when the function icon and two horizontal bars (▬ ▬) are displayed.

Note: If a deactivated button is pressed, there is no function, and the two horizontal bars are displayed.

To activate functions:

1. Install batteries. All icons are displayed and flashing.
2. While the icons are flashing, press the relevant function button and hold for 10 seconds.
3. The function icon will continue to flash until activation is complete, and then turn solid. Activation is complete when the function icon is displayed.

Setting Celsius or Fahrenheit

To change between °C and °F, press and hold ⏻ + ⌛ simultaneously.

Note : °C = 24-hour clock
°F = 12-hour clock

Setting the Time

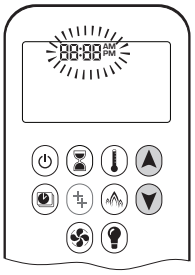

1. Press ▲ + ▼ simultaneously. **Day** flashes.
2. Press ▲ + ▼ to select a number to correspond with the day of the week.
   - 1 = Monday
   - 2 = Tuesday
   - 3 = Wednesday
   - 4 = Thursday
   - 5 = Friday
   - 6 = Saturday
   - 7= Sunday
3. Press ▲ + ▼ simultaneously. **Hour** flashes.
4. To select hour press ▲ or ▼.
5. Press ▲ + ▼ simultaneously. **Minutes** flash.
6. To select minutes press ▲ or ▼.
7. To confirm, press ▲ + ▼ simultaneously or wait.

Appendix B–Remote Control Operation

Child Proof

Your handset can be set to lock out all commands to the fireplace, except OFF.

To turn Child Proof ON:

1. Press and hold ⏻ + ▼ simultaneously.
2. is displayed. Child Proof is now active.

To turn Child Proof OFF:

1. Press and hold ⏻ + ▼ simultaneously.
2. disappears. Child Proof is now inactive, and the handset has full function.

Countdown Timer

You can set your fireplace to automatically turn off at the end of a timer.

To set a Countdown Timer:

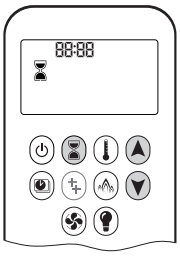

1. Press and hold ⌛ until ⌛ is displayed. **Hour** flashes.
2. Press ▲ or ▼ to select Hour.
3. To confirm, press ⌛. **Minutes** flash.
4. Press ▲ or ▼ to select Minutes.
5. To confirm, press ⌛ or wait.

To turn off a Countdown Timer:

1. Press ⌛, and the ⌛ countdown disappears.

Note: The Countdown Timer only works in Manual, Thermostatic, and Eco modes. Maximum countdown time is 9 hours and 50 minutes.

Light/Dimmer Operation (not available)

Circulating Fan Operation (if installed)

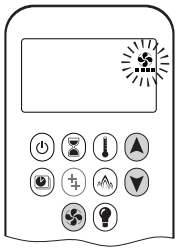

Setting:

1. Press and hold ✇ until ✇ flashes.
2. Press ▲ to increase or ▼ to decrease fan speed.
3. To confirm setting, either press ✇ or wait. ✇ is displayed.

Off:

Press ▼ until all 4 speed level bars disappear.

Note: When setting, if the fan was not switched off after last use, it starts automatically 4 minutes after ignition at maximum speed, and goes to the last set level after 10 seconds. The fan stops 10 minutes after the gas is OFF or at pilot.

Appendix B–Remote Control Operation

Modes of Operation

Thermostatic Mode

The room temperature is measured and compared to the set temperature. The flame height is automatically adjusted to achieve the set temperature.

Program Mode

The temperature is controlled by Programs 1 and 2, each of which can be set to go on and off at specific times, at a set temperature.

Eco Mode

Flame height modulates between high and low. If the room temperature is lower than the set temperature, the flame height stays on high for a longer period of time. If the room temperature is higher than the set temperature, the flame height stays on low for a longer period of time. One cycle lasts approximately 20 minutes.

Manual Mode

The on/off status of the fireplace, as well as flame height, are manually controlled by the user.

Thermostatic Mode

On:

Press . is displayed. Preset temperature displays briefly, followed by the room temperature.

Setting Desired Temperature:

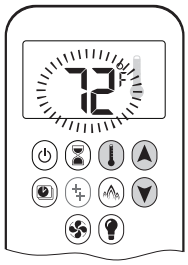

1. Press and hold until is displayed and set temperature flashes.
2. To adjust set temperature, press or .
3. To confirm, press or wait.

Off:

1. Press .
2. Press or to go to Manual Mode.
3. Press to go to Program Mode.
4. Press to go to Eco Mode.

Program Mode

On:

Press .
, **1** or **2**, **ON** or **OFF** are displayed.

Off:

1. Press , , or to go to Manual Mode.
2. Press to go to Thermostatic Mode.
3. Press to go to Eco Mode.

Note: The set temperature for Thermostatic Mode is the temperature for the ON time in Program Mode. Changing the Thermostatic Mode set temperature also changes the ON time temperature in Program Mode.

Default Settings:

- ON TIME (Thermostatic) TEMPERATURE: 70°F / 21°C
- OFF TIME TEMPERATURE: "– –" (pilot flame only)

Appendix B–Remote Control Operation

Temperature Setting:

1. Press and hold until flashes. **ON** and set temperature (set in Thermostatic Mode) is displayed.
2. To continue, press or wait. , **OFF** displayed, temperature flashes.
3. Select off temperature by pressing or .
4. To confirm, press .

Note: The on (Thermostatic) and off set temperatures are the same for each day.

Day Setting:

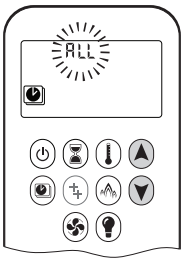

1. **ALL** flashes. Press or to choose between:
   - **ALL** = same settings ON-OFF every day
   - **SA:SU** = same settings ON-OFF Saturday and Sunday
   - **1, 2, 3, 4, 5, 6, 7** = daily timer—unique ON-OFF settings for a single day of the week, for multiple days of the week or for every day of the week.
2. To confirm, press .

ALL Selected (same settings every day)

On Time Setting (PROGRAM 1)

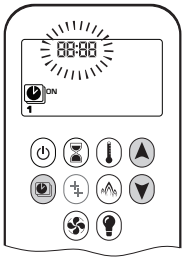

1. , **1, ON** are displayed. **ALL** is displayed briefly. Hour flashes.
2. To select hour, press or .
3. To confirm, press . , **1, ON** are displayed. **ALL** displayed briefly. Minutes flash.
4. To select minutes, press or .
5. To confirm, press .

Off Time Setting (PROGRAM 1)

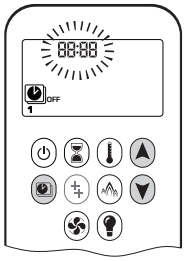

1. , **1, OFF** are displayed. **ALL** is displayed briefly. Hour flashes.
2. To select hour, press or .
3. To confirm, press . , **1, OFF** are displayed. **ALL** displayed briefly. Minutes flash.
4. To select minutes, press or .
5. To confirm, press .

Note: Either continue to PROGRAM 2 and set ON and OFF times or stop programming at this point, and PROGRAM 2 remains deactivated.

Note: PROGRAM 1 and 2 use the same ON (Thermostatic) and OFF temperatures. Once a new ON (Thermostatic) and/or OFF temperature has been set, that temperature becomes the new default setting.
Note: ON and OFF times programmed for PROGRAM 1 and PROGRAM 2 become the new default times.

The batteries must be removed to clear the PROGRAM 1 and PROGRAM 2 ON and OFF times and temperatures.

SA:SU (same settings Saturday and Sunday) or 1, 2, 3, 4, 5, 6, 7 (different settings on different days)

- Set on time and off time using the same procedure as "ALL Selected" above.
- Waiting to finish setting.

Eco Mode

On:

Press button to enter Eco Mode. is displayed.

Flame height modulates between high and low every 20 minutes.

Off:

Press button to exit Eco Mode. disappears.

Appendix B–Remote Control Operation

Low Battery Indication

⚠ **CAUTION:** Do not use a screwdriver or other metallic object to remove the batteries from the battery holder or the handset. This could cause a short circuit.

Handset

The battery icon will show when the battery needs to be replaced. Replace with two 1.5 V AAA alkaline batteries.

Receiver

Frequent beeps for 3 seconds when the motor turns indicate the batteries in the battery holder need to be replaced. Replace with four 1.5 V AA alkaline batteries.

Automatic Shut Off

Countdown Timer

At the end of countdown time period, the fire turns off. The Countdown Timer only works in Manual, Thermostatic, and Eco Modes. Maximum countdown time is 9 hours and 50 minutes.

Low Battery Receiver

With low battery power in the battery holder, the system shuts off the fire completely. (This will not happen if the power is completely interrupted.)

Seven Day Shut Off

The system shuts off the fire completely if there is no change in flame height for 7 days.

Automatic Turn Down

3 Hour No Communication Function

The valve will turn to pilot flame if there is no communication between the handset and receiver for a 3-hour period. The fire will continue to function normally when communication is restored.

Appendix B–Remote Control Operation

Error Codes

In the event of an error condition with the handset or fireplace, the handset will display an error code.

Failure Code	Message on Handset	Duration of Display	Symptom	Possible Cause
F04	F04	4 sec	• No pilot flame within 30 sec • **Note:** after 3 failed ignition sequences, F06 shown	• No gas supply • Air in pilot supply line • No spark • Reversed polarity in thermocouple wiring
F06	F06	4 sec	• 3 failed ignition sequences in 5 minutes • Fire is not responding, no pilot flame	• No gas supply • Air in pilot supply line • No spark • Reversed polarity in thermocouple wiring • Incorrect pilot orifice if valve has been converted from LPG to NG or vice versa
F07	Low battery symbol	Permanent	• Battery icon flashes on handset display	• Low battery in handset
F09	F09	4 sec	• Fire is not responding • No electronic control of fire	• Down arrow button ▼ was not pressed during pairing • Receiver and handset are not synced
F46	F46	4 sec	• Fire is not responding • Intermittent response • No electronic control of fire	• No or bad connection between receiver and handset • No power at receiver (batteries low) • Low communication range (mains adapter faulty, handset not communicating with receiver)

Appendix C–Spare Parts

	Description	Part Number
1	Autofire vent plate assembly	4006540
2	Exhaust plate gasket	4001662
3	Shroud (2)	4002446AZ
4	Burner cover platform	4007794BY
5	Cover panel, Driftwood Kit	4007895
6	Side cover	4002289
7	Support bracket	4007479
8	Left hand base panel	4007883
9	Right hand base panel	4007884
10	Window assembly	4004463S
11	Hot glass warning plate	4003093
12	Access plate gasket	4002664
13	Valve access plate	4002510
14	Battery holder cable (1500 mm)	4006552
15	Battery holder	4008039
16	Valor10 handset, black	4007548
17	Valor10 wall holder	4004459
18	GV60 valve repair kit (not included)	4004544
19	Module assembly (natural gas)	4012595S
	Module assembly (propane)	4012596S
20	Pilot assembly (natural gas)	4006019S
	Pilot assembly (propane)	4006020S
21	Thermocouple	4004801
22	Pilot injector #51 (natural gas)	4000735
	Pilot injector #30 (propane)	4000736
23	Pilot hood 2-flame	4000730
24	Pilot mounting bracket	4007142
25	Pilot shield	4008555AH
26	Flex pipe assembly with valve	4002475
27	Burner with bracket	4007354
28	Burner mount (2)	4007140
29	Anti-flashback shield	4007629
30	Air shutter (natural gas)	4007136
	Air shutter (propane)	4008699
31	Spring tension washer	4007460
32	Steel flat washer	4007461
33	Injector elbow 82-850 (natural gas)	9730010
	Injector elbow 92-300 (propane)	9730035
34	Gas supply tube assembly	4007848
35	Thermocurrent interruptor	4001037
36	GV60 Valve, no connectors	4000873
36a	Inlet connector	4000746
36b	Inlet elbow	4007704
36c	Straight connector	220K891

	Description	Part Number
36d	By-pass screw #185 (natural gas)	4000300
	By-pass screw #125 (propane gas)	incl. w/#36
37	Top module plate gasket	4002403
38	Side module plate gasket (2)	4002404
39	Bottom module plate gasket	4002405
40	Symax receiver two-way	4005597
41	Thermocouple pilot sealing plate	4002700
42	Pipe sealing plate	4004338
43	Wiring harness	4001187
44	Ignition cable	4004800
45	Ignition cable sleeve	4002244
46	Interruptor cable, red	4001035
47	Interruptor cable, yellow	4002096
48	Ceramic liner kits (complete kit)	
a	Ledgestone V3	786LSLV3
b	Red Brick	789VRLV2
c	Fluted Black	788FBLV2
49	Top panel	
a	Ledgestone V3	4007997
b	Red Brick	4002385
c	Fluted Black	4002374
50	Left hand panel	
a	Ledgestone V3	4007998
b	Red Brick	4002382
c	Fluted Black	4002377
51	Right hand panel	
a	Ledgestone V3	4007999
b	Red Brick	4002383
c	Fluted Black	4002378
52	Rear panel	
a	Ledgestone V3	4008000
b	Red Brick	4004266
c	Fluted Black	4004268
53	Reflective glass liner kit	787RGL
54	Top liner panel	4002374
55	Rear glass panel	4004707
56	Rear filler panel	4004799
57	Side filler panel (2 - one for each side)	4002776
58	Left hand glass panel	4004708
59	Right hand glass panel	4004709
60	Glass retainer	4004883AH
61	Side anchor	4004710AH
62	Side spacer (5)	4004711AH

Appendix C–Spare Parts

	Description	Part Number
63	Reflective glass panel (rear) kit	785RGP
64	Rear glass panel	4004707
65	Glass retainer	4004883AH
66	Birch log kit	1000BLKV2
	Log no. H1	4007463
	Log no. H2	4007464
	Log no. G3	4008161
	Log no. G4	4008162
	Log no. G5	4008163
	Log no. H13	4008903
	Log no. H7	4007469
	Log no. H9	4007471
	Log no. H10	4007472
	Log no. H11	4007473
	Embers—2 cup bag	4008304
67	Traditional log kit	1000LSKV2
	Log no. H32	4008905
	Log no. H33	4008906
	Log no. H34	4008617
	Log no. G4	4008162
	Log no. G10	4008168
	Log no. H28	4007505
	Log no. G16	4008306
	Log no. H31	4007508
	Log no. H10	4007472
	Log no. H11	4007473
	Embers—2 cup bag	4008304
68	Driftwood log kit	1000DWKV2
	Log no. H15	4007494
	Log no. H36	4008967
	Log no. H17	4007496
	Log no. G4	4008162
	Log no. H22	4008904
	Log no. G15	4008305
	Log no. H20	4007499
	Log no. H21	4007500
	Pebbles (3)	4008173
	Embers— 2 cup bag	4008304
69	2.5-4.5” hose clamp (2)	4000768

Appendix C–Spare Parts

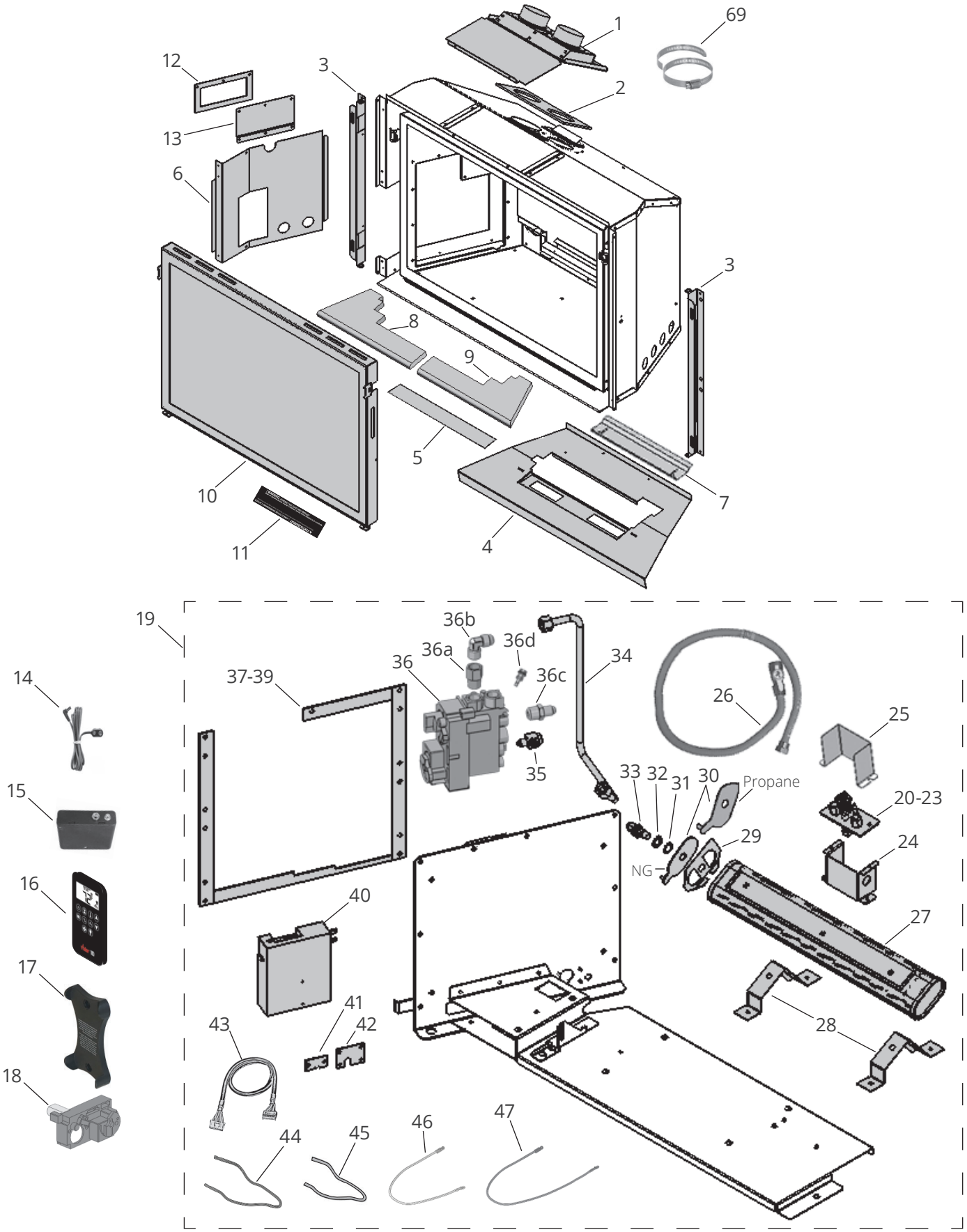
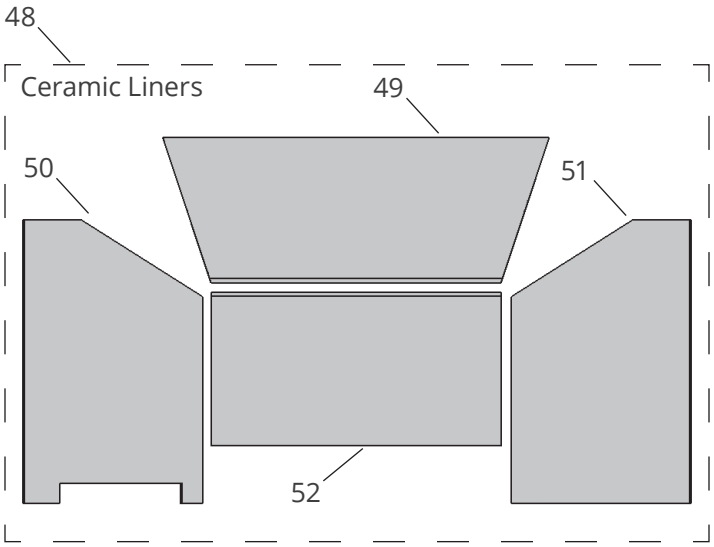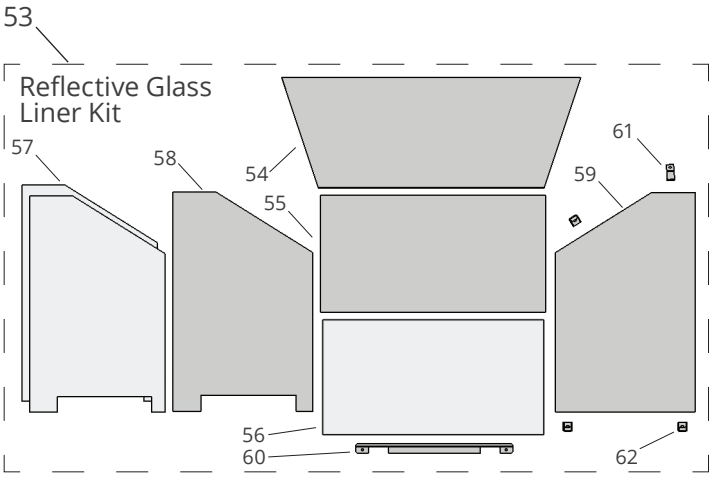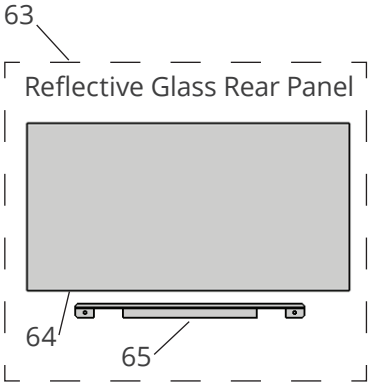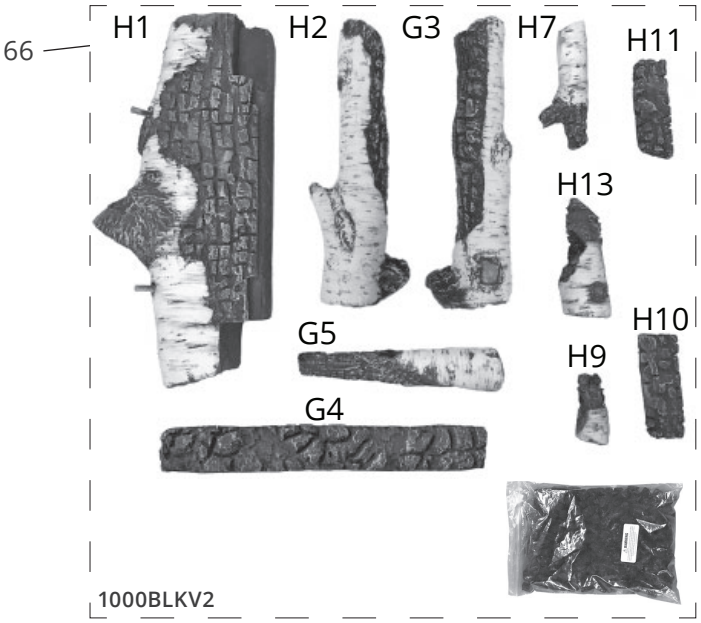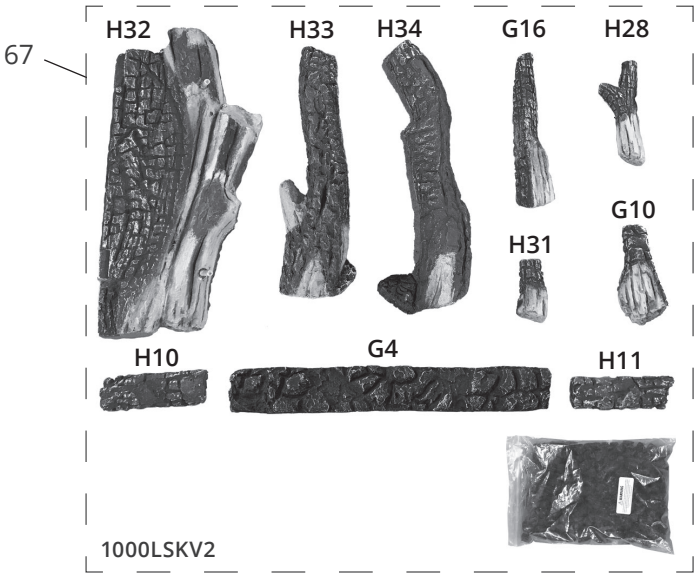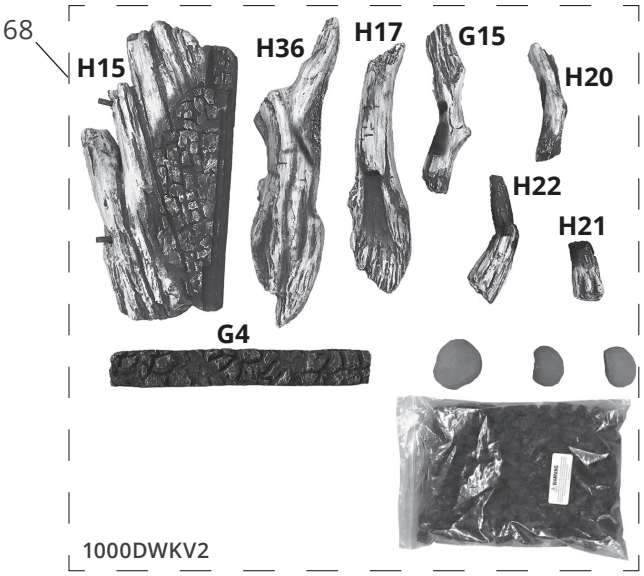
Appendix C–Spare Parts