Homeowner's Manual

valor

G4 with AutoFire™

Insert Gas Fireplaces
natural gas 780RN
propane gas 780RP

Canadian Patent 2,717,779 Issued October 24 2017
US Patent 10,060,624 Issued August 28 2018
US Patent 10,935,246 Issued March 2 2021

⚠ WARNING:
FIRE OR EXPLOSION HAZARD
Failure to follow safety warnings exactly could result in serious injury, death, or property damage.

Do not store or use gasoline or other flammable vapors and liquids in the vicinity of this or any other appliance.

WHAT TO DO IF YOU SMELL GAS

- **Do not try to light any appliance.**
- **Do not touch any electrical switch; do not use any phone in your building.**
- **Leave the building immediately.**
- **Immediately call your gas supplier from a neighbor's phone. Follow the gas supplier's instructions.**
- **If you cannot reach your gas supplier, call the fire department.**

Installation and service must be performed by a qualified installer, service agency or the gas supplier.

⚠ DANGER

Hot glass will cause burns.

Do not touch glass until cooled.

Never allow children to touch glass.

A barrier designed to reduce the risk of burns from the hot viewing glass is provided with this appliance and must be installed for the protection of children and other at-risk individuals.

4009806-03

This appliance may be installed in an after-market permanently located, manufactured (mobile) home where not prohibited by local codes. This appliance is only for use with the type of gas indicated on the rating plate. This appliance is not convertible for use with other gases, unless a certified kit is used.

INSTALLER: Leave this manual with the appliance.

CONSUMER: Retain this manual for future reference.

Massachusetts:

The piping and final gas connection must be performed by a licensed plumber or gas fitter in the State of Massachusetts. Also, see Carbon Monoxide Detector requirements in the fireplace installation manual.

⚠WARNING

This product can expose you to chemicals including Benzene, which is known to the State of California to cause cancer and birth defects or other reproductive harm.

For more information go to www.P65Warnings.ca.gov.

Note: Natural gas, in its original state, contains Benzene.

We recommend a US Certified National Fireplace Institute (NFI) specialist install our gas hearth products.

The information contained in this manual is believed to be correct at the time of printing. Miles Industries Ltd. reserves the right to change or modify any information or specifications without notice. Miles Industries Ltd. grants no warranty, implied or stated, for the installation or maintenance of your heater, and assumes no responsibility for any consequential damage(s).

© Copyright Miles Industries Ltd., 2026. All rights reserved.
Designed and manufactured for Miles Industries Ltd.

Valor Fireplaces
190–2255 Dollarton Highway
North Vancouver, BC, Canada V7H 3B1
T 604.984.3496 F 604.984.0246
valorfireplaces.com

Welcome to Valor®

Thank you for purchasing a Valor Fireplace. We appreciate your business and wish you many happy years enjoying your new fireplace.

Your new radiant gas heater is a technical appliance that must be installed by a qualified dealer. Each Valor® fireplace is fully tested during the production process for your safety and comfort.

Your unit has been professionally installed by:

Dealer Name: _____

Phone: _____

If you experience any problems, call your dealer immediately. To avoid injury or damage to your fireplace, do not try to repair the unit yourself.

Your Valor Fireplace

Here are some important details about your Valor fireplace, should you need to contact your dealer.

Model: _____

Serial: _____

Options: _____

_____

_____

Please ask your installer for these details if they are not already provided, or see page 7.

Important—Register your warranty

Registration of your Valor is highly recommended, and can be completed by scanning the QR code on the serial number label placed on the fireplace's installation manual cover by the installer or by visiting valorfireplaces.com/warranty.

Completing your registration enables us to properly address any warranty or service-related concerns that you may have. This information is strictly for customer service and warranty purposes, and will never be shared with any third party.

Homeowner: Please read this manual before operating this appliance, and save for future reference.

Contents

Safety and your fireplace 4

Child safety and your fireplace 6

Getting started 7
- First time operation 7
- Locating fireplace and lighting information 7

Parts of your fireplace 8

Operating your fireplace 9
- Fireplace control devices 9
- Preventing inadvertent ignition 10

Replacing batteries 11

Annual service and maintenance 12

Cleaning your fireplace 13

Checking pilot and burner flames 16

Frequently asked questions 17

Valor® Indoor Installation Warranty 19

Valor® Outdoor Installation Warranty 21

Appendix A-Remote Control Operation 23

Safety and your fireplace

This manual contains very important information about the safe operation and maintenance of your fireplace. Read and understand all instructions carefully before operating your fireplace. Failure to follow these instructions may result in possible fire hazard and will void the warranty.

Replacement manuals are available by contacting Valor Customer Service at 1-800-468-2567, or by visiting **valorfireplaces.com**.

⚠ WARNING: Extremely Hot!

Heat and flammability

- Some parts of the fireplace are extremely hot, particularly the glass window. Use the barrier screen provided or a gate to reduce the risk of severe burns.
- The glass windows can exceed 500°F at full capacity.
- Always keep the appliance clear and free from combustible materials, gasoline, and other flammable vapors and liquids.
- Be aware of hot wall surfaces! The wall directly above the fireplace can get very hot when the fireplace heats. Although safe, it may reach temperatures in excess of 200°F (93°C) depending on choice of optional accessories. Do not touch!
- Be aware of hot shelf/hearth/floor surfaces! Any projections directly around the fireplace can get very hot when the fireplace heats. Although safe, they may reach temperatures in excess of 200°F (93°C) depending on their elevation. Be careful of touching these! Do not put objects on the hearth or shelf. Temperature of projection surfaces will be reduced when barrier screens are installed.
- Some materials or items, although safe, may discolor, shrink, warp, crack, peel, and so on because of the heat produced by the fireplace. Avoid placing candles, paintings, photos and other combustible objects sensitive to heat or furniture within 36 inches (0.9 m) around the fireplace.
- Solid wood flooring in front of the fireplace (if allowed) may shrink during the heating season due to heat.
- Due to high temperatures, the appliance should be located out of traffic areas and away from furniture and draperies.
- Clothing or other flammable material should not be placed on or near the appliance.

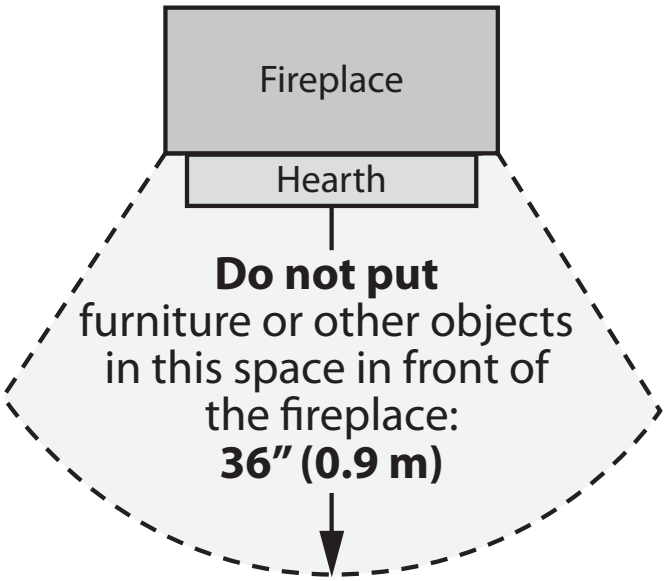

Barrier Screen and Safety

- A barrier designed to reduce the risk of burns from the hot viewing glass is provided with this appliance and must be installed for the protection of children and other at-risk individuals.
- Children and adults should be alerted to the hazards of high surface temperature and should stay away to avoid burns or clothing ignition.
- Young children should be carefully supervised when they are in the same room as the appliance. Toddlers, young children, and others may be susceptible to accidental contact burns. A physical barrier is recommended if there are at-risk individuals in the house. To restrict access to a fireplace or stove, install an adjustable safety gate to keep toddlers, young children, and other at-risk individuals out of the room and away from hot surfaces.
- Any safety screen, guard, or barrier removed for servicing an appliance, must be replaced prior to operating the appliance.

Safety and your fireplace

Glass window

⚠ WARNING

Do not operate this appliance with the glass front removed, cracked, or broken.

Do not strike or slam the glass front.

Replacement of the glass front should be performed by a licensed or qualified service person.

- The glass front assembly must be in place and sealed before the unit can be placed into safe operation.
- The glass front assembly must only be replaced as a complete unit, as supplied by the fireplace manufacturer. No substitute material may be used.
- Do not use abrasive cleaners on the glass front assembly. Do not attempt to clean the glass when it is hot.

Venting

- This unit must be used with a vent system as described in its installation manual. No other vent system or components may be used.
- Never obstruct the flow of combustion and ventilation air. Keep the front of the appliance clear of all obstacles and materials for servicing and proper operation.
- This gas fireplace and vent assembly must be vented directly to the outside and must never be attached to a chimney serving a separate solid fuel burning appliance. Each gas appliance must use a separate vent system. Common vent systems are prohibited.

Intended use

- This appliance is designed and approved as a supplemental heater and provides the potential for most energy conservation when used while attended. The use of an alternate primary heat source is advisable.
- This unit is not for use with solid fuel.
- Do not use this heater as a temporary source of heat during construction.

Installation and Servicing

- Installation and repair should be done by a qualified service person. The appliance should be inspected before use and at least annually by a professional service person. More frequent cleaning might be required due to excessive lint from carpeting, bedding material, et cetera. It is imperative that control compartments, burners, and circulating air passageways of the appliance be kept clean.
- Do not use this appliance if any part has been under water. Immediately call a qualified service technician to inspect the appliance and to replace any part of the control system and any gas control that has been under water.

Maintenance

- Keep the unit's control compartment, burner, and circulating air passageways clean to enable adequate combustion and ventilation air.
- Inspect the external vent cap on a regular basis to ensure that no debris, plants, trees, or shrubs are interfering with air flow.

Child safety and your fireplace

⚠ DANGER

Hot glass will cause burns.

Do not touch glass until cooled.

Never allow children to touch glass.

A barrier designed to reduce the risk of burns from the hot viewing glass is provided with this appliance and must be installed for the protection of children and other at-risk individuals.

A heating gas appliance does require safe handling. For this reason, we very strongly recommend children not be allowed to touch the fireplace or its controls.

Read and carefully follow all safety warnings and operating instructions contained in this manual, and follow these important child safety precautions and recommendations:

- Parts of your Valor Fireplace become extremely hot while in operation. The glass window temperature can exceed 500° F at full capacity.
- Do not let children touch the glass or any parts of your fireplace even after it is turned off, as the surfaces will remain hot for some time.
- Even momentary contact with a hot glass surface can cause a severe burn, including when the fireplace is operating at reduced heating capacity.
- The glass window will remain hot for an extended period of time after the fireplace has been turned off. Make sure that children do not touch the fireplace during the cool down period.
- Children and adults should be alerted to the hazards of high surface temperature and should stay away to avoid burns or clothing ignition.
- Young children should be carefully supervised when they are in the same room as the appliance. Toddlers, young children, and others may be susceptible to accidental contact burns.

  A physical barrier is recommended if there are at-risk individuals in the house. To restrict access to a fireplace or stove, install an adjustable safety gate to keep toddlers, young children, and other at-risk individuals out of the room and away from hot surfaces.
- Keep the remote control handset out of reach of children at all times.
- Make sure that the fireplace, including the pilot light, is completely turned off when children are present and close supervision is not available—see pages 9-10 for details.
- If the fireplace is not going to be used for an extended period of time, remove the batteries from the remote control handset and battery holder under the firebox. It is recommended that batteries are replaced annually —see page 11 for details.

Getting started

First time operation

When operating your new fireplace for the first time, some vapors may be released due to the burning of curing compounds used during manufacturing. They may cause a slight odor and could cause the flames to be the full height of the firebox, or even slightly higher, for the first few hours of operation.

It is also possible that these vapors could set off any smoke detection alarms in the immediate vicinity. These vapors are quite normal on new fireplaces. We recommend opening a window to vent the room. After a few hours of use, the vapors will have disappeared and the flames will be at their normal height.

Valor automatic gas shut-off

For your safety, Valor fireplaces are fitted with a flame supervision device which will shut-off the gas supply if, for any reason, the pilot flame goes out. This device incorporates a fixed probe, which senses the heat from the pilot flame. If the probe is cool, the device will prevent any gas flow unless manually lighting the pilot. See the full Fireplace and Lighting Information card attached to the fireplace or as reproduced in Appendix A of the Installation Manual.

WARNING

Do not attempt to access the card while the fireplace is hot! Let the fireplace cool first before touching it!

Locating fireplace and lighting information

The Fireplace and Lighting Information card is located at the right of the firebox.

To access the card, remove the right hand side door, and pull the card out.

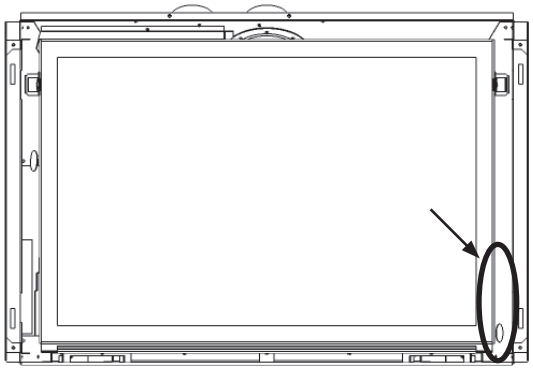

There is important information on both sides of the card. It must be left with the fireplace when you are done.

Parts of your fireplace

Here are the major components of your installed fireplace, with the protective barrier installed. Your individual fireplace may appear differently depending on your model and installed options.

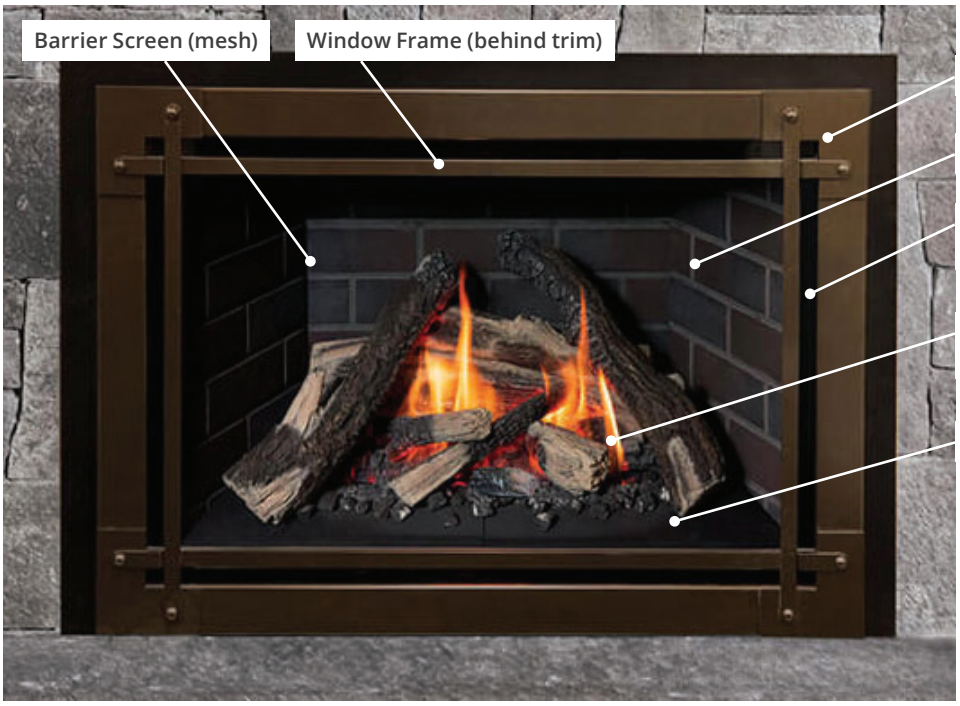

Trim

Liners

Side Doors
Fireplace info card behind the right door

Fuel Bed
Logs, embers, pebbles

Burner Platform

Here are the control components of your installed fireplace, with the barrier screens and covers removed. Your individual fireplace may appear differently depending on your model and installed options.

Window Levers

Info Card

Window Rail

Receiver
Control Valve
Battery Holder

Operating your fireplace

Fireplace control devices

There are two ways to control your fireplace.

1. **Thermostatic Remote Control** turns fire and lights ON and OFF, controls flame height and can be programmed to function automatically.
2. **Wall Switch** (optional) turns fire ON and OFF, and controls flame height.

Remote Control

Wall Switch (optional)

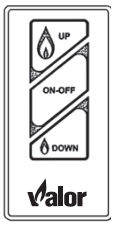

Turn your fireplace ON

⚠ WARNING

STOP IF YOU SMELL GAS! DO NOT LIGHT!
See cover page immediately!

Press and hold:
- ⏻ button on remote, or
- ON-OFF button on wall switch

until 8 short beeps confirm the start sequence has begun; release button.

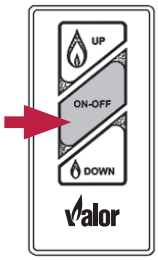

The pilot lights up, followed by the fireplace.

If you are using the handset, it displays a pilot flame symbol (🔥) during the ignition sequence.

If you need to light up the pilot manually, see the Fireplace and Lighting Information plate attached to the fireplace - see page 9 to learn how to access it. Also, a copy of this plate is reproduced in Appendix A of the Installation Manual.

Turn your fireplace OFF (including pilot)

Press and hold:
- ⏻ button on remote, or
- ON-OFF button on wall switch

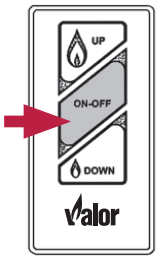

If the flames or pilot are on, they will go out and you will hear the valve motor wind down. You will hear a clunk and a beep indicating that the valve has received the signal from the remote control.

In the unlikely event that you cannot turn off your fireplace with the remote control handset, use the wall switch. If the wall switch malfunctions and will not turn off the fireplace, wait 3 hours and the fireplace will automatically go to pilot. You can then access the controls inside your fireplace, once it has cooled.

⚠ WARNING

Risk of severe burns! Surface of the fireplace are very hot during operation! Ensure fireplace has cooled off before accessing control.

Alternatively, you may turn off the house gas supply. In all cases, call your dealer for service assistance.

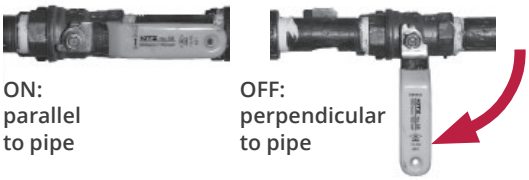

ON: parallel to pipe

OFF: perpendicular to pipe

To use additional functions of your Remote Control such as temperature or program settings, see *Appendix A - Remote Control Operation* on pages 9–9 of this manual or visit valorfireplaces.com/remotes

Operating your fireplace

Child proofing your handset

Your remote control can be locked to prevent operation by children.

To turn child proofing ON:

1. Press and hold the ⏻ and ▼ buttons simultaneously.
2. is displayed on the handset screen making the handset inoperable, with the exception of the OFF function.

To turn child proofing OFF:

1. Press and hold the ⏻ and ▼ buttons simultaneously.
2. disappears from the handset screen and the handset is returned to full functionality.

Preventing inadvertent ignition

You can use one of the following two methods to ensure that your fireplace will not turn on unexpectedly.

⚠ WARNING

Risk of severe burns! Surface of the fireplace are very hot during operation! Ensure fireplace has cooled off before accessing control.

- On gas valve, turn dial from ON position to MAN* position as shown. Turning dial to MAN will make sures that main burner cannot come on. The pilot will remain on if lit.

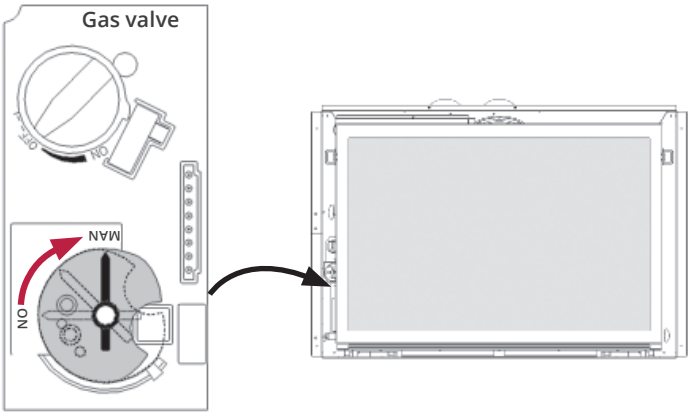

* To activate the fireplace again, turn dial back from MAN to ON position.

- Alternately, ensure the fireplace is off, including the pilot and cooled off. Remove all batteries from the battery holder in the control area (see next page), and from the handset.

Automatic shut-off (in certain conditions)

Your fireplace's remote control is equipped with an automatic shut-off mechanism which is activated in certain conditions. See *Remote Control Operation* at Appendix A or valorfireplaces.com/remotes for a description of this feature.

Replacing batteries

WARNING

Do not attempt to access the batteries while the fireplace is hot! Let the fireplace cool first before touching it!

Caution

Do not use a screwdriver or other metallic object to remove the batteries from the battery holder or the handset! This could cause a short circuit.

Low battery signals:

- Handset: battery icon on display displays one lit bar.
- Receiver: rapid series of beeps during use and operation.

BEFORE changing the batteries, turn the fireplace off (including pilot).

The fireplace uses four AA 1.5 V **alkaline** batteries in a separate battery holder located behind the fireplace trim on the left hand side. The handset requires two 1.5V AAA **alkaline** battery. Batteries should last one to two seasons, depending on usage. Removing the batteries during the off-season will extend battery life.

Should the batteries lose power, the control may be operated by manually turning the control knob at the valve.

The battery holder is located behind the left door.

To replace the batteries in the battery holder:

1. Unhook the barrier screen.
2. Open or remove left hand side access door.
3. Locate the battery holder and carefully pull it out from its location.

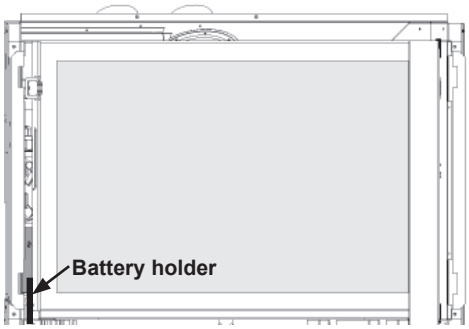

4. Disconnect it from its cable. **Do not pull on the wire!**.

700R Battery holder

5. Remove the cover (1 screw).
6. Replace the batteries with 4 new AA 1.5V **alkaline** batteries. **Do not mix new/old batteries**.

Caution

Do not put batteries in the receiver as leaking acid could damage its circuit board.

7. Reinstall the cover and secure it.
8. Reconnect the cable.
9. Put the battery holder back in its position.
10. Reinstall the left side door and rehook the barrier screen.
11. Dispose of used batteries according to your local government hazardous waste requirements.

Using Handset Wall Holder

Your fireplace equipment includes a wall holder to store the handset. If it hasn't been installed, refer to the instructions in the fireplace Installation Manual.

Remote and wall holder

Annual service and maintenance

We recommend having your fireplace serviced before initial use, and at least once per year by a qualified service technician. Contact your dealer quoting the model serial number, if possible. It will be helpful if the fireplace's serial number can also be quoted. These numbers are on the information card (see page 7).

A list of replacement parts is included in your fireplace Installation Manual. When requesting spare parts please quote the part number and description to ensure the correct part is ordered.

Annual Inspection

To ensure the optimal performance and safety of your fireplace, contact your dealer to have a qualified technician review and verify the list below at least once every year.

Safe Operation List: to be performed by a qualified technician only.

- ☐ Inspect and operate the pressure relief mechanism to verify relief mechanisms are free from obstruction to operate. See *Cleaning your fireplace on page 13*.
- ☐ Clean glass window with a suitable fireplace glass cleaner. Abrasive cleaners must not be used. Be careful not to scratch the glass when cleaning. See *Cleaning your fireplace on page 13*.
- ☐ Inspect the operation of the flame safety system Pilot or Flame rectification device.
- ☐ Inspect and ensure the lighting of the main burner occurs within 4 seconds of the main gas valve opening. Visual inspection should match that outlined in the appliance instruction manual. Inspect primary air openings for blockage. See *Checking pilot and burner flames on page 16*.
- ☐ Inspect condition of vent and vent terminal for sooting or obstruction and correct if present.
- ☐ Vacuum and clean any excess debris in the firebox that is not supposed to be there.
- ☐ Test and measure the flame failure response time of the flame safety system. It must de-energize the safety shut-off in less than 30 seconds.
- ☐ Check all accessible gas-carrying tubes, connections, pipes and other components for leaks. See *Set up Gas Supply* section of the fireplace Installation Manual.

⚠ Caution

Label all wires prior to disconnection when servicing controls. Wiring errors can cause improper and dangerous operation.

Verify proper operation after servicing.

Cleaning your fireplace

WARNING

Risk of severe burns! Surfaces of the fireplace are very hot during operation. Ensure fireplace has cooled off before touching it.

Remove the window for cleaning

1. Unhook the trim with the barrier screen.
2. Remove the side doors as indicated.

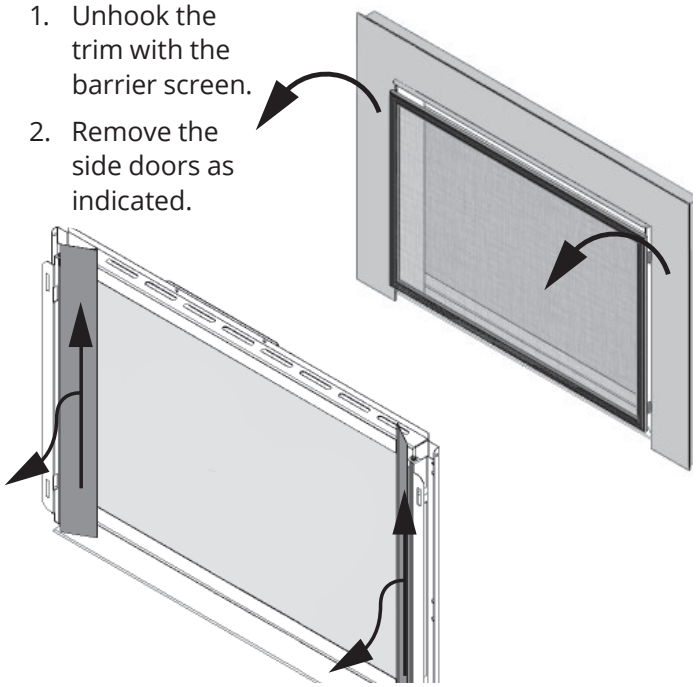

3. Locate the window retainer hooks. Pull the levers toward you and unhook them from the window frame brackets.

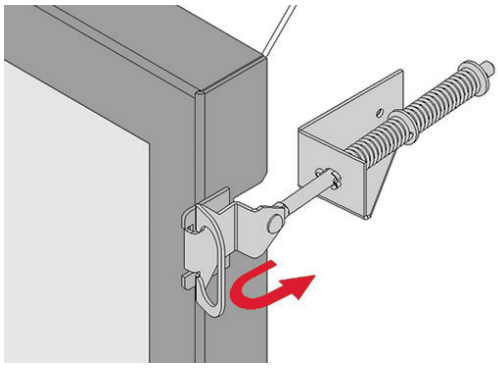

Spring-loaded window lever

4. Carefully pull the top of the window outward.
5. Lift the window out of the bottom railing and set it aside in a safe place to avoid damage.

Cleaning your fireplace

WARNING

Risk of severe burns! The glass window is very hot during operation. Ensure the fireplace and glass have cooled off before touching them.

Cleaning glass mineral deposits

A by-product of the combustion process in a gas fireplace is a mineral which can appear as a white film on the ceramic glass window of your appliance.

The composition of the deposit varies depending on location and time, and can appear intermittently.

There is no definitive solution to this issue. Various cleaning products have been tried with varying results. The following are recommendations only and cannot guarantee results.

Note: Mineral deposits occur naturally and are not covered under the Valor® warranty.

- Clean the glass regularly to avoid a buildup of film from mineral. If the film is left for a long period of time, it can etch the glass, making it much harder, if not impossible, to remove.
- Never use an abrasive cleaner or ammonia-based cleaner on the ceramic glass. Any abrasion of the surface can compromise the strength of the glass. An emulsion-type cleaner is recommended.
- Use a soft damp cloth to apply the cleaner. Dry the glass with a soft, dry, preferably cotton cloth. Most paper towels and synthetic materials are abrasive to ceramic glass and should be avoided. Follow all instructions on the bottle/container.
- Our dealers have experienced good results from the products listed below. We cannot, however, guarantee results of these products.
  - » Brasso, Polish Plus by KelKem, Cook Top Clean Creme by Elco, White Off by Rutland, Turtle Wax

Do not clean the glass while it is hot

- Always securely replace the window and the barrier screen before lighting (see next page).
- If broken, glass panes may only be replaced as a complete window unit as supplied by the manufacturer.
- If the barrier screen becomes damaged, it must only be replaced with the same model and version barrier from Valor.

Cleaning other parts

- Clean the steel trims with mild soap and warm water. Any alcohol/solvent-based cleaner may weaken and damage the coating.
- Clean the barrier screens by dusting with a soft brush.
- Clean the firebox ceramic logs/rocks and walls by dusting them with a soft brush. Dust can also be removed from the burner using a soft brush after removing the ceramic logs. When cleaning, make sure that no particles are brushed into the slots of the burner.

Caution

Choking Hazard! Make sure the fireplace area is clear of firebed small particles to avoid ingestion by small children. Vacuum thoroughly around the fireplace area after cleaning.

Log position

Log position is important in your Valor fireplace because it can optimize the beauty of the flame and the combustion efficiency of your fireplace.

If logs are moved during glass cleaning or other fireplace maintenance, refer to your fireplace Installation Manual for specific instructions on how to position them for optimal operation. If you are not comfortable performing this maintenance, please contact your dealer.

Cleaning your fireplace

Refit and Check Window

1. Place the window in its bottom railing and push its top against the firebox. **Ensure to remove any particles in the railing before installing the window.**

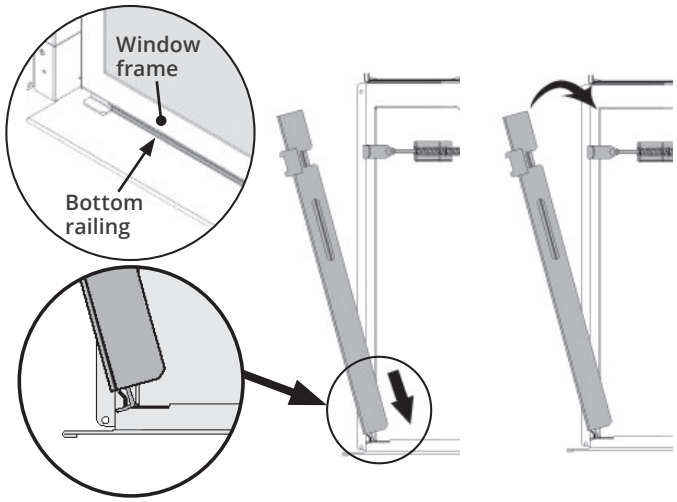

2. While you hold it, hook the side levers into the window tabs.

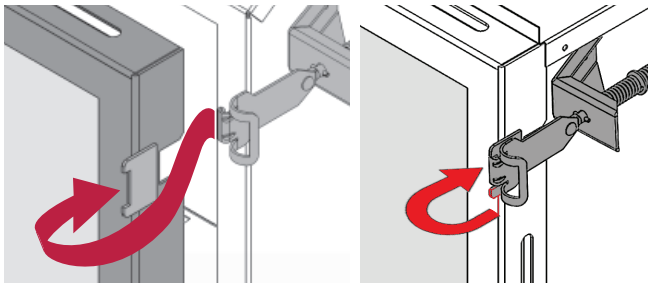

3. Pull out the top of the window and release it to ensure the springs return it.
4. Apply firm hand pressure around the window frame to ensure the window is sealed tight against the firebox.
5. **If the Hot Glass Warning plate has been removed from the front lower corner of the window, reinstall it by sliding it between the glass and the frame as indicated below.**

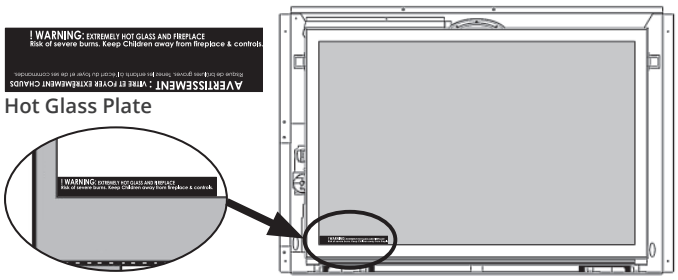

⚠ WARNING

The window unit must be correctly installed, fastened and sealed after servicing or serious bodily injury and/or damage to the appliance may result.

To ensure a safe operation:

- **Double-check that the bottom of the window frame is correctly installed in the bottom support railing;**
- **Verify that the levers are hooked properly to the window tabs then;**
- **Pull out top of the window and release it to ensure the springs return it;**
- **Ensure the window is sealed before operation.**

⚠ WARNING

Failure to install the window correctly can:

- **Leak carbon monoxide.**
- **Affect the performance of the fireplace.**
- **Damage components.**
- **Cause overheating resulting in dangerous conditions.**

Damage caused by incorrect window installation is not covered by the Valor Warranty.

6. Reinstall side panels.
7. Reinstall the trim with barrier screen.

⚠ WARNING

For safety purposes, make sure the barrier screen is re-installed on the fireplace front after maintenance.

Checking pilot and burner flames

The pilot light and burner flames should be checked periodically. Check after the fire has been on for at least 30 minutes. The pilot flame must cover the tip of the thermocouple probe. The main burner flame pattern will vary depending on the type of installation and climatic conditions.

Performance of propane gas fireplaces may be affected by the quality of commercial gas supplied in your area.

The fireplace area must always be kept clear and free from combustible materials, gasoline and other flammable vapors and liquids.

Inspect the vent terminal outdoors regularly to ensure that it is not obstructed by snow, trees, bushes, leaves, or other objects. We recommend at least an annual inspection.

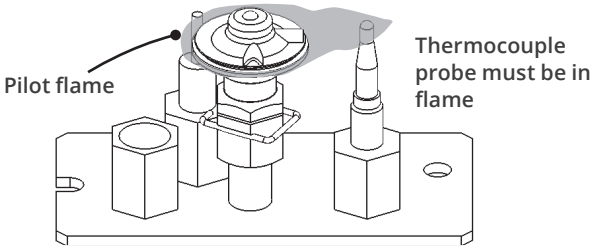

Note

The height and color of your flames can vary depending on fuel type, fuel quality and mixture, altitude, and aeration adjustment at or after installation.

The photos of typical flame appearance are for illustrative purposes only. Your fireplace may be operating normally but appear different than the photos.

Venting configuration, elevation, burner aeration setting and local fuel heating value can all affect flame appearance.

Typical flame appearance

Traditional Logs

Driftwood Logs

Birch Logs

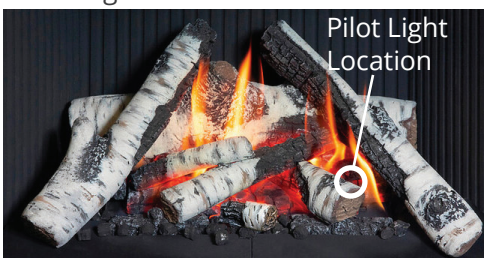

Frequently asked questions

Question	Answer
What if my fireplace won't turn on?	If you have followed all instructions for your remote control or wall switch (see page 9 or pages 23-26) and your fireplace still won't turn on, the batteries located in the battery holder may be low and need replacing. See page 11 for instructions on how to replace the batteries. If the fireplace still won't turn on after that, call your dealer for further information. Your fireplace may require service by a qualified service technician. Visit **valorfireplaces.com/contact** for a list of dealers near you.
I've just started my fireplace for the first time, what is that smell?	When operating your fireplace for the first time, some vapors may be released due to the burning of curing compounds used during manufacturing. They may cause a slight odor and could cause the flames to be the full height of the firebox, or even slightly higher, for the first few hours of operation. This is perfectly normal. See *First Time Operation* on page 7 for more information.
When I operate the fireplace, why do I suddenly hear a faster series of beeps than usual?	This is an indication that the batteries in your fireplace are getting critically low (not the batteries in your remote control handset, but the batteries in the battery holder). See page 11 for instructions on how to replace the batteries.
Why do I hear popping or snapping noises?	As your fireplace heats and cools with normal use, its metal parts will expand and contract, which may cause some noise. This is pefectly normal.
Why do I hear whirring noises?	As you start or adjust your fireplace's flame, the control valve motor turns to adjust the settings. This is perfectly normal.
How do I clean my fireplace?	See *Cleaning your fireplace* pages 13–15 for cleaning instructions to keep your fireplace looking great.
I dropped some pieces of embers under the fireplace while cleaning, is this dangerous?	No. The embers from the fuel bed are not flammable and will not impact the operation of your fireplace. If this happens, vacuum them up when you clean your fireplace.
There is condensation on the inside of the glass, is this okay?	This is normal when the fireplace first turns on, and will disappear naturally when the fireplace heats up.
There is a white film on the inside of the glass, is this okay?	This happens due to composition of the gas from your supplier. A by-product of the combustion process in a gas fireplace is a mineral which can appear as a white film on the ceramic glass window of your appliance. Clean as soon as possible (when the fireplace is cool) so it does not bake onto the glass with time and become permanent. See *Cleaning your fireplace* pages 13–15 for instructions.

Frequently asked questions

Question	Answer
When I start my fireplace, the flame is blue or transparent, is this normal?	This is normal, your flame will take on a more yellow/orange appearance as the fireplace heats up.
When I start my fireplace, the flame is dirty or black, is this normal?	No. This is possibly caused by a blocked opening in the burner which can be cleaned by vacuuming it. See pages 13-15 for cleaning instructions, and call your dealer if the problem persists after cleaning.
After running for some time, my fireplace has soot gathering on the logs, panels, or roof, it this normal?	Minor amount of soot developing on logs is common, but soot that builds up, falls off, and accumulates indicates the burner needs adjustment, or the logs may have been installed incorrectly. Contact your dealer for remedies to excessive sooting.
Where can I purchase parts for my fireplace?	Any of our Valor dealers are able to order parts or provide field service. Please contact your dealer - see page 3 - or visit **valorfireplaces.com/contact** for a list of dealers near you.
Who can service my fireplace?	We recommend having your fireplace serviced before initial use, and at least once every year by a qualified service technician. Contact our dealer, quoting the model and serial numbers, if possible. These numbers can be found on the fireplace information card attached to the fireplace - see page 7.
Why does my pilot light go out when I leave the house for extended periods of time?	Your fireplace has a built-in safety shutoff. If the flame height does not adjust for 7 days, the fireplace will automatically turn the pilot off, and would need to be turned on again using either the handset or wall switch.
Why doesn't the fireplace turn down when it goes above the temperature I've set?	Rather than constantly turning your fireplace up and down, the temperature feature of your remote control is designed to efficiently give you a smooth maintenance of a comfortable temperature. With this you may find temperature fluctuations beyond the set point to varying degrees, depending on installation and room size.

Valor® Indoor Installation Warranty

If you have a problem with this unit, please contact your dealer or supplier immediately. Under no circumstances should you attempt to service the unit in any way by yourself. Any attempt to do so shall void this warranty. The warranties in paragraphs 1 and 2 are provided only to the initial user of this unit, are not transferable and are subject to the conditions and limitations in paragraphs 3, 4 and 5. Please review the conditions and limitations carefully and strictly follow their requirements. THIS WARRANTY IS EXCLUSIVE AND IN LIEU OF ALL OTHER WARRANTIES, REPRESENTATIONS, OR CONDITIONS, WHETHER EXPRESS OR IMPLIED, INCLUDING ANY IMPLIED WARRANTIES OF MERCHANTABILITY OR FITNESS FOR A PARTICULAR PURPOSE, EXCEPT TO THE EXTENT SUCH DISCLAIMERS ARE PROHIBITED BY APPLICABLE LAW. SOME JURISDICTIONS DO NOT ALLOW THE EXCLUSION OR LIMITATION OF IMPLIED WARRANTIES, SO THE ABOVE LIMITATION OR EXCLUSION MAY NOT APPLY TO YOU. THIS WARRANTY GIVES YOU SPECIFIC LEGAL RIGHTS, AND YOU MAY ALSO HAVE OTHER RIGHTS WHICH VARY.

THIS WARRANTY CONTAINS LIMITATIONS ON LIABILITY AND SHOULD BE REVIEWED CAREFULLY.

1. Extended Warranty Coverage

For a period of up to ten (10) years, Miles Industries Ltd., (the "Company") or its appointed distributor will at its option pay the initial owner for the repair of, or will exchange the following parts or components which are found to be defective in material or workmanship under normal conditions of use and service:

Maximum Warranty Period		**10 years**
Part or Component	**Defect Covered**	
Exterior steel casing	Corrosion	✓
Glass	Loss of structural integrity	✓
Cast iron parts	Corrosion	✓
Firebox and heat exchanger	Corrosion (but not discoloration) causing loss of structural integrity	✓

2. Two-Year Parts Warranty

In addition, for two (2) years from the date of purchase, the Company, at its option, will repair or exchange all parts and components not listed above but that are determined by the Company, in its sole discretion, to have a bona fide defect in material or workmanship under normal conditions of use.

3. Conditions and Limitations

a) Warranty registration must be completed online by the initial owner within 90 days of purchase at www.valorfireplaces.com

b) Installation and maintenance must be performed by an authorized and trained dealer in accordance with the Company's installation instructions.

c) This warranty is void where installation of the unit does not conform to all applicable codes including without limitation national and local gas appliance installation codes and building and fire codes.

d) The owner must comply at all times with all operating instructions.

e) The Company is not responsible for the labor costs to remove defective parts or re-install repaired or replacement parts and this warranty is limited to the payment for or replacement of such parts.

f) The claimant under this limited warranty shall be responsible for any shipping charges for replacement parts as well as travel time incurred by the dealer to perform the warranty work.

g) This warranty is void if it is apparent that there is abuse, misuse, alteration, improper installation, accident or failure to perform maintenance on and to the unit as specified in the owner's manual.

h) The warranty does not cover damage to the unit through:

   i) Improper installation, modification, or operation.

   ii) Environmental conditions.

   iii) Inadequate ventilation in the area or competition for air from other equipment or appliances.

   iv) Chemicals, dampness, condensation, or sulphur in the fuel supply lines which exceeds industry standards.

i) This warranty does not cover glass, log breakage or damage to the unit while in transit.

j) The Company does not allow anyone to extend, alter or modify this warranty and assumes no responsibility for direct, indirect or consequential damages caused

by the unit. State or provincial laws where the user resides may provide specific rights extending this warranty and, if so, the Company's sole obligation under this warranty is to provide labor and/or materials in accordance with those laws.

k) THE REMEDIES EXPRESSLY PROVIDED IN THIS WARRANTY ARE THE SOLE AND EXCLUSIVE REMEDIES AVAILABLE TO THE PURCHASER IN RESPECT OF THE PRODUCT, AND THE COMPANY'S TOTAL CUMULATIVE LIABILITY FOR ANY CLAIM, WHETHER IN CONTRACT, TORT (INCLUDING NEGLIGENCE), OR OTHERWISE, SHALL NOT EXCEED THE ORIGINAL PURCHASE PRICE OF THE PRODUCT. TO THE EXTENT PERMITTED BY APPLICABLE LAW, IN NO EVENT WILL THE COMPANY, OR ITS DIRECTORS, OFFICERS, OR AGENTS, BE LIABLE TO THE PURCHASER OR ANY THIRD PARTY FOR ANY INDIRECT, SPECIAL, PUNITIVE, EXEMPLAR, CONSEQUENTIAL, OR INCIDENTAL LOSS, COST, OR DAMAGE, ARISING OUT OF OR IN CONNECTION WITH THE SALE, MAINTENANCE, USE, OR INABILITY TO USE THE PRODUCT, EVEN IF THE COMPANY OR ITS DIRECTORS, OFFICERS, OR AGENTS HAVE BEEN ADVISED OF THE POSSIBILITY OF SUCH LOSSES, COST, OR DAMAGES, OR IF SUCH LOSSES, COST, OR DAMAGES ARE FORESEEABLE.

4. Discharge of Liability

After two (2) years from the date of purchase, the Company may, at its sole and absolute discretion, fully and finally discharge all obligations under this warranty by paying to the initial owner the then-current wholesale price of the unit.

5. No Other Warranty

EXCEPT AS EXPRESSLY PROVIDED IN THIS WARRANTY AND TO THE EXTENT PERMITTED BY APPLICABLE LAW, THE COMPANY DISCLAIMS ALL OTHER WARRANTIES, CONDITIONS, REPRESENTATIONS, AND OBLIGATIONS, WHETHER EXPRESS OR IMPLIED BY STATUTE, COMMON LAW, USAGE, OR OTHERWISE, INCLUDING ANY IMPLIED WARRANTIES OR CONDITIONS OR MERCHANTABLE QUALITY OR FITNESS FOR A PARTICULAR PURPOSE. NO AGENT, DEALER, OR DISTRIBUTOR IS AUTHORIZED TO CHANGE, MODIFY, OR EXTEND THE TERMS OF THIS WARRANTY ON BEHALF OF THE COMPANY.

6. Governing Law

This warranty shall be governed by, and construed in accordance with, the laws of the Province of British Columbia and the federal laws of Canada applicable therein. Any disputes arising under or in connection with this warranty shall be subject to the exclusive jurisdiction of the courts of British Columbia, without regard to conflict of laws principles.

Valor® Outdoor Installation Warranty

If you have a problem with this unit, please contact your dealer or supplier immediately. Under no circumstances should you attempt to service the unit in any way by yourself. Any attempt to do so shall void this warranty. The warranties in paragraph 1 are provided only to the initial user of this unit, are not transferable and are subject to the conditions and limitations in paragraphs 2, 3 and 4. Please review the conditions and limitations carefully and strictly follow their requirements. THIS WARRANTY IS EXCLUSIVE AND IN LIEU OF ALL OTHER WARRANTIES, REPRESENTATIONS, OR CONDITIONS, WHETHER EXPRESS OR IMPLIED, INCLUDING ANY IMPLIED WARRANTIES OF MERCHANTABILITY OR FITNESS FOR A PARTICULAR PURPOSE, EXCEPT TO THE EXTENT SUCH DISCLAIMERS ARE PROHIBITED BY APPLICABLE LAW. SOME JURISDICTIONS DO NOT ALLOW THE EXCLUSION OR LIMITATION OF IMPLIED WARRANTIES, SO THE ABOVE LIMITATION OR EXCLUSION MAY NOT APPLY TO YOU. THIS WARRANTY GIVES YOU SPECIFIC LEGAL RIGHTS, AND YOU MAY ALSO HAVE OTHER RIGHTS WHICH VARY.

THIS WARRANTY CONTAINS LIMITATIONS ON LIABILITY AND SHOULD BE REVIEWED CAREFULLY.

1. Two-Year Parts Warranty

In addition, for two (2) years from the date of purchase, the Company, at its option, will repair or exchange all parts and components not listed above but that are determined by the Company, in its sole discretion, to have a bona fide defect in material or workmanship under normal conditions of use.

2. Conditions and Limitations

a) Warranty registration must be completed online by the initial owner within 90 days of purchase at www.valorfireplaces.com

b) Installation and maintenance must be performed by an authorized and trained dealer in accordance with the Company's installation instructions.

c) This warranty is void where installation of the unit does not conform to all applicable codes including without limitation national and local gas appliance installation codes and building and fire codes.

d) The owner must comply at all times with all operating instructions.

e) The Company is not responsible for the labor costs to remove defective parts or re-install repaired or replacement parts and this warranty is limited to the payment for or replacement of such parts.

f) The claimant under this limited warranty shall be responsible for any shipping charges for replacement parts as well as travel time incurred by the dealer to perform the warranty work.

g) This warranty is void if it is apparent that there is abuse, misuse, alteration, improper installation, accident or failure to perform maintenance on and to the unit as specified in the owner's manual.

h) The warranty does not cover damage to the unit through:

   i) Improper installation, modification, or operation.

   ii) Environmental conditions.

   iii) Inadequate ventilation in the area or competition for air from other equipment or appliances.

   iv) Chemicals, dampness, condensation, or sulphur in the fuel supply lines which exceeds industry standards.

i) This warranty does not cover glass, log breakage or damage to the unit while in transit.

j) The Company does not allow anyone to extend, alter or modify this warranty and assumes no responsibility for direct, indirect or consequential damages caused by the unit. State or provincial laws where the user resides may provide specific rights extending this warranty and, if so, the Company's sole obligation under this warranty is to provide labor and/or materials in accordance with those laws.

k) THE REMEDIES EXPRESSLY PROVIDED IN THIS WARRANTY ARE THE SOLE AND EXCLUSIVE REMEDIES AVAILABLE TO THE PURCHASER IN RESPECT OF THE PRODUCT, AND THE COMPANY'S TOTAL CUMULATIVE LIABILITY FOR ANY CLAIM, WHETHER IN CONTRACT, TORT (INCLUDING NEGLIGENCE), OR OTHERWISE, SHALL NOT EXCEED THE ORIGINAL PURCHASE PRICE OF THE PRODUCT. TO THE EXTENT PERMITTED BY APPLICABLE LAW, IN NO EVENT WILL THE COMPANY, OR ITS DIRECTORS, OFFICERS, OR AGENTS, BE LIABLE TO THE PURCHASER OR ANY THIRD PARTY FOR ANY INDIRECT, SPECIAL, PUNITIVE, EXEMPLAR, CONSEQUENTIAL, OR INCIDENTAL LOSS, COST, OR DAMAGE, ARISING OUT OF OR IN CONNECTION WITH THE SALE, MAINTENANCE, USE, OR INABILITY

Valor® Outdoor Installation Warranty

TO USE THE PRODUCT, EVEN IF THE COMPANY OR ITS DIRECTORS, OFFICERS, OR AGENTS HAVE BEEN ADVISED OF THE POSSIBILITY OF SUCH LOSSES, COST, OR DAMAGES, OR IF SUCH LOSSES, COST, OR DAMAGES ARE FORESEEABLE.

3. Discharge of Liability

After two (2) years from the date of purchase, the Company may, at its sole and absolute discretion, fully and finally discharge all obligations under this warranty by paying to the initial owner the then-current wholesale price of the unit.

4. No Other Warranty

EXCEPT AS EXPRESSLY PROVIDED IN THIS WARRANTY AND TO THE EXTENT PERMITTED BY APPLICABLE LAW, THE COMPANY DISCLAIMS ALL OTHER WARRANTIES, CONDITIONS, REPRESENTATIONS, AND OBLIGATIONS, WHETHER EXPRESS OR IMPLIED BY STATUTE, COMMON LAW, USAGE, OR OTHERWISE, INCLUDING ANY IMPLIED WARRANTIES OR CONDITIONS OR MERCHANTABLE QUALITY OR FITNESS FOR A PARTICULAR PURPOSE. NO AGENT, DEALER, OR DISTRIBUTOR IS AUTHORIZED TO CHANGE, MODIFY, OR EXTEND THE TERMS OF THIS WARRANTY ON BEHALF OF THE COMPANY.

5. Governing Law

This warranty shall be governed by, and construed in accordance with, the laws of the Province of British Columbia and the federal laws of Canada applicable therein. Any disputes arising under or in connection with this warranty shall be subject to the exclusive jurisdiction of the courts of British Columbia, without regard to conflict of laws principles.

Appendix A-Remote Control Operation

Remote Control Pairing

The receiver and the handset of the remote control system are initially paired at the time of installation. However, if one of those two components is replaced, they must be paired again before they can be used.

1. If not already done, insert two 1.5V AAA high quality **alkaline** batteries in the handset. Ensure there are also four 1.5V AA alkaline batteries in the battery holder located left of the firebox, behind the side door.
2. Locate the receiver left of the firebox, behind the side door. Its Reset button is at the front.

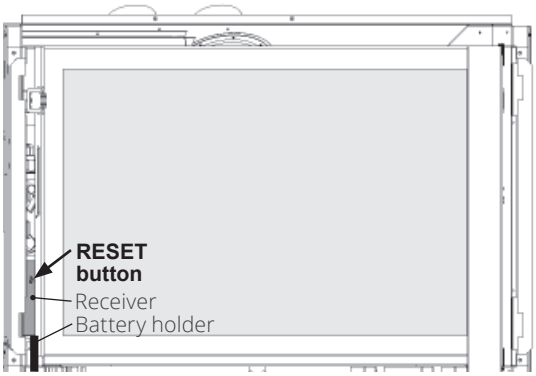

3. With a thin object, press and hold the receiver's RESET button until you hear one short and one long beeps. After the second beep, release the reset button.

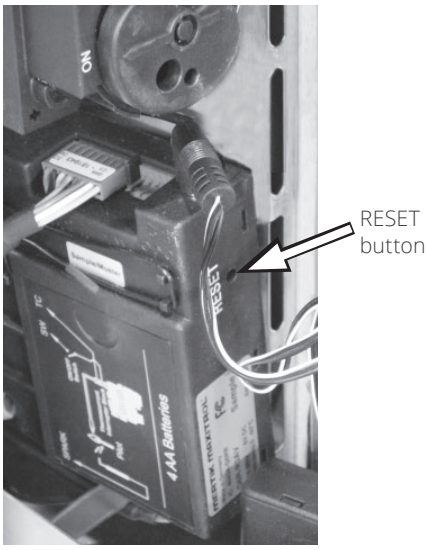

4. Within the subsequent 20 seconds, press and hold the ▼ button on the remote handset for 2-3 seconds. COMM will be displayed on the handset during the pairing sequence. You will hear two short beeps confirming the pairing is done.

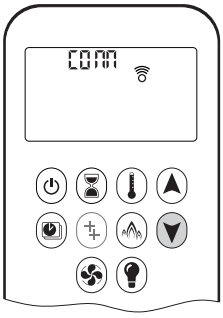

If you hear one long beep, the pairing sequence has failed or the wiring is incorrect.

This is a one time pairing only and is not required when changing the batteries of the handset or battery holder. The remote control system is now ready to use.

Radio Frequency

918.0 MHz for USA and Canada.

This device complies with Part 15 of the FCC Rules and with Industry Canada license-exempt RSS standard(s). Operation is subject to the following two conditions:

(1) this device may not cause harmful interference, and

(2) this device must accept any interference received, including interference that may cause undesired operation.

Appendix A-Remote Control Operation

Note: Before using the remote control system for the first time, the receiver and the handset must be paired. See the *Remote Control Pairing* on the previous page.

Main Display and Remote Handset

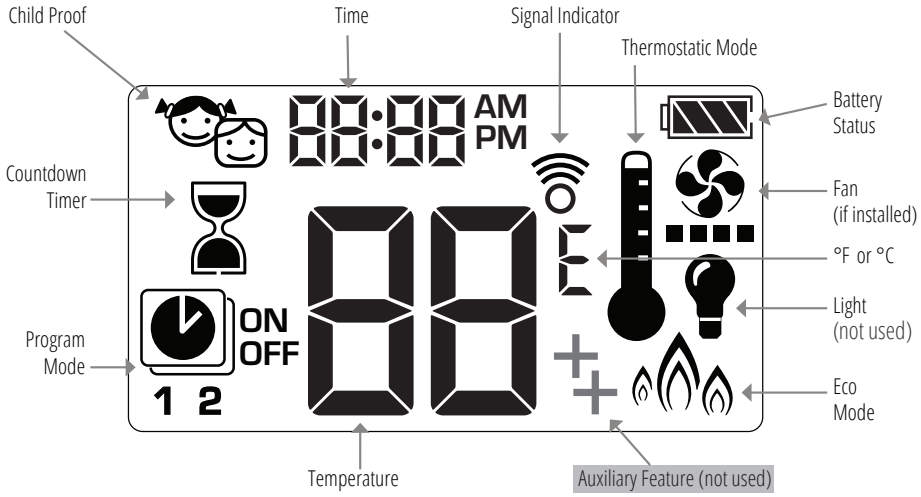

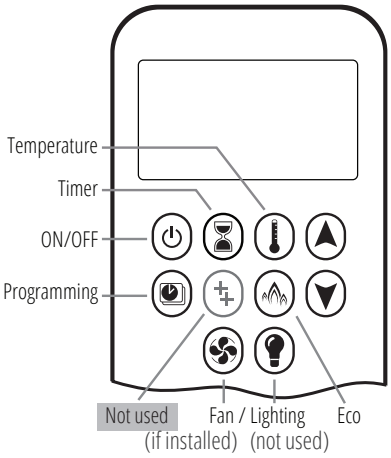

To Turn On Fire

NOTE: When pilot ignition is confirmed, motor automatically turns to maximum flame height.

One-Button lighting (default): ⏻
Two-Button lighting: ⏻ + ▲ simultaneously

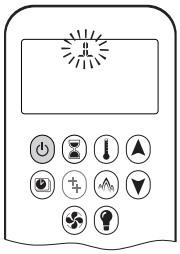

Press and hold for 4 seconds, until 8 short beeps and a blinking series of lines confirms the start sequence has begun. Release button.

Main gas flows once pilot ignition is confirmed.

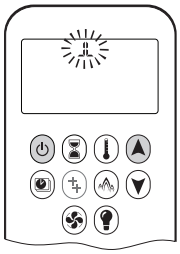

Handset automatically goes into manual mode after main burner ignition.

Standby Mode (Pilot Flame)

Press and hold ▼ to set appliance to pilot flame.

CAUTION: If the pilot does not stay lit after several tries call your local service technician or gas supplier.

To Turn Off Fire

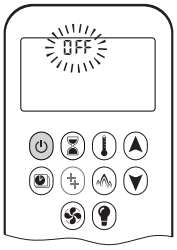

Press ⏻ to turn OFF.

Note: There is a 2 minute delay after switching off before the next ignition is possible.

CAUTION: Always check the fire and pilot visually to ensure they are off.

Flame Height Adjustment

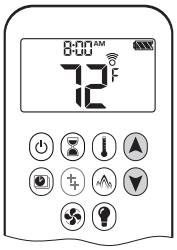

To increase flame height, press and hold ▲.

To decrease flame height, press and hold ▼. You may hold the button down until the fire is set to pilot flame only.

Appendix A-Remote Control Operation

Designated Low Fire and High Fire

To go to low fire, double-click ▼. "LO" is displayed.

Note: Flame goes to high fire first before going to low fire.

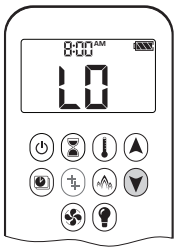

To go to high fire, double-click ▲. "HI" is displayed.

Choosing 1-Button or 2-Button Ignition

On the remote control handset, you can choose a 1-button or 2-button ignition. You can also choose to activate or deactivate some of the functions. By default, the handset is set to a 1-button ignition.

To change from 1-button to 2-button ignition, remove the batteries, wait 10 seconds, reinsert batteries, and immediately when the display flashes, press and hold the ⏻ button for 10 seconds. **ON** is displayed and **1** is flashing. When change is complete, **1** changes to **2**.

To change from 2-button to 1-button ignition, proceed the same as above. **ON** is displayed and **2** is flashing. When change is complete, **2** changes to **1**.

Deactivating or Activating Functions

These functions are active by default, but can be deactivated at any time:

- Child Proof
- Program Mode
- Thermostatic Mode
- Eco Mode
- Circulating Fan Operation
- Countdown Timer

NOTE: The function Auxiliary Feature is not used.

To deactivate functions:

1. Install batteries. All icons are displayed and flashing.
2. While the icons are flashing, press the relevant function button and hold for 10 seconds.
3. The function icon will flash until deactivation is complete. Deactivation is complete when the function icon and two horizontal bars (▬ ▬) are displayed.

Note: If a deactivated button is pressed, there is no function, and the two horizontal bars are displayed.

To activate functions:

1. Install batteries. All icons are displayed and flashing.
2. While the icons are flashing, press the relevant function button and hold for 10 seconds.
3. The function icon will continue to flash until activation is complete, and then turn solid. Activation is complete when the function icon is displayed.

Setting Celsius or Fahrenheit

To change between °C and °F, press and hold ⏻ + ⌛ simultaneously.

Note : °C = 24-hour clock
°F = 12-hour clock

Setting the Time

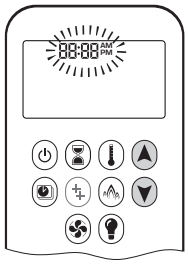

1. Press ▲ + ▼ simultaneously. **Day** flashes.
2. Press ▲ + ▼ to select a number to correspond with the day of the week.
   - 1 = Monday
   - 2 = Tuesday
   - 3 = Wednesday
   - 4 = Thursday
   - 5 = Friday
   - 6 = Saturday
   - 7= Sunday
3. Press ▲ + ▼ simultaneously. **Hour** flashes.
4. To select hour press ▲ or ▼.
5. Press ▲ + ▼ simultaneously. **Minutes** flash.
6. To select minutes press ▲ or ▼.
7. To confirm, press ▲ + ▼ simultaneously or wait.

Appendix A-Remote Control Operation

Child Proof

Your handset can be set to lock out all commands to the fireplace, except OFF.

To turn Child Proof ON:

1. Press and hold ⏻ + ▼ simultaneously.
2. is displayed. Child Proof is now active.

To turn Child Proof OFF:

1. Press and hold ⏻ + ▼ simultaneously.
2. disappears. Child Proof is now inactive, and the handset has full function.

Countdown Timer

You can set your fireplace to automatically turn off at the end of a timer.

To set a Countdown Timer:

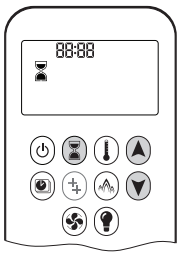

1. Press and hold ⌛ until ⌛ is displayed. **Hour** flashes.
2. Press ▲ or ▼ to select Hour.
3. To confirm, press ⌛. **Minutes** flash.
4. Press ▲ or ▼ to select Minutes.
5. To confirm, press ⌛ or wait.

To turn off a Countdown Timer:

1. Press ⌛, and the ⌛ countdown disappears.

Note: The Countdown Timer only works in Manual, Thermostatic, and Eco modes. Maximum countdown time is 9 hours and 50 minutes.

Light/Dimmer Operation

Not available on this appliance.

Circulating Fan Operation (OPTIONAL)

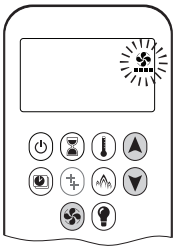

Setting:

1. Press and hold ✣ until ✣ flashes.
2. Press ▲ to increase or ▼ to decrease fan speed.
3. To confirm setting, either press ✣ or wait. ✣ is displayed.

Off:

Press ▼ until all 4 speed level bars disappear.

Note: When setting, if the fan was not switched off after last use, it starts automatically 4 minutes after ignition at maximum speed, and goes to the last set level after 10 seconds. The fan stops 10 minutes after the gas is OFF or at pilot.

Appendix A-Remote Control Operation

Modes of Operation

Thermostatic Mode

The room temperature is measured and compared to the set temperature. The flame height is automatically adjusted to achieve the set temperature.

Program Mode

The temperature is controlled by Programs 1 and 2, each of which can be set to go on and off at specific times, at a set temperature.

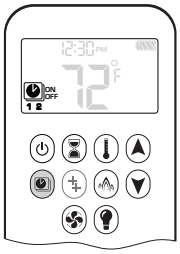

Eco Mode

Flame height modulates between high and low. If the room temperature is lower than the set temperature, the flame height stays on high for a longer period of time. If the room temperature is higher than the set temperature, the flame height stays on low for a longer period of time. One cycle lasts approximately 20 minutes.

Manual Mode

The on/off status of the fireplace, as well as flame height, are manually controlled by the user.

Thermostatic Mode

On:

Press . is displayed. Preset temperature displays briefly, followed by the room temperature.

Setting Desired Temperature:

1. Press and hold until is displayed and set temperature flashes.
2. To adjust set temperature, press or .
3. To confirm, press or wait.

Off:

1. Press .
2. Press or to go to Manual Mode.
3. Press to go to Program Mode.
4. Press to go to Eco Mode.

Program Mode

On:

Press .
, **1** or **2**, **ON** or **OFF** are displayed.

Off:

1. Press , , or to go to Manual Mode.
2. Press to go to Thermostatic Mode.
3. Press to go to Eco Mode.

Note: The set temperature for Thermostatic Mode is the temperature for the ON time in Program Mode. Changing the Thermostatic Mode set temperature also changes the ON time temperature in Program Mode.

Default Settings:

- ON TIME (Thermostatic) TEMPERATURE: 70°F / 21°C
- OFF TIME TEMPERATURE: "– –" (pilot flame only)

Appendix A-Remote Control Operation

Temperature Setting:

1. Press and hold until flashes. **ON** and set temperature (set in Thermostatic Mode) is displayed.
2. To continue, press or wait. , **OFF** displayed, temperature flashes.
3. Select off temperature by pressing or .
4. To confirm, press .

Note: The on (Thermostatic) and off set temperatures are the same for each day.

Day Setting:

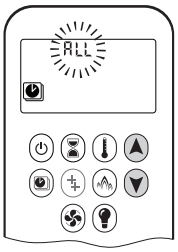

1. **ALL** flashes. Press or to choose between:
   - **ALL** = same settings ON-OFF every day
   - **SA:SU** = same settings ON-OFF Saturday and Sunday
   - **1, 2, 3, 4, 5, 6, 7** = daily timer—unique ON-OFF settings for a single day of the week, for multiple days of the week or for every day of the week.
2. To confirm, press .

ALL Selected (same settings every day)

On Time Setting (PROGRAM 1)

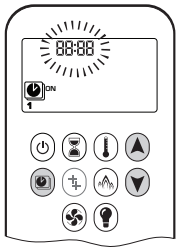

1. , **1, ON** are displayed. **ALL** is displayed briefly. Hour flashes.
2. To select hour, press or .
3. To confirm, press . , **1, ON** are displayed. **ALL** displayed briefly. Minutes flash.
4. To select minutes, press or .
5. To confirm, press .

Off Time Setting (PROGRAM 1)

1. , **1, OFF** are displayed. **ALL** is displayed briefly. Hour flashes.
2. To select hour, press or .
3. To confirm, press . , **1, OFF** are displayed. **ALL** displayed briefly. Minutes flash.
4. To select minutes, press or .
5. To confirm, press .

Note: Either continue to PROGRAM 2 and set ON and OFF times or stop programming at this point, and PROGRAM 2 remains deactivated.

Note: PROGRAM 1 and 2 use the same ON (Thermostatic) and OFF temperatures. Once a new ON (Thermostatic) and/or OFF temperature has been set, that temperature becomes the new default setting.
Note: ON and OFF times programmed for PROGRAM 1 and PROGRAM 2 become the new default times.

The batteries must be removed to clear the PROGRAM 1 and PROGRAM 2 ON and OFF times and temperatures.

SA:SU (same settings Saturday and Sunday) or 1, 2, 3, 4, 5, 6, 7 (different settings on different days)

- Set on time and off time using the same procedure as "ALL Selected" above.
- Waiting to finish setting.

Eco Mode

On:

Press button to enter Eco Mode. is displayed.

Flame height modulates between high and low every 20 minutes.

Off:

Press button to exit Eco Mode. disappears.

Appendix A-Remote Control Operation

Low Battery Indication

⚠ **CAUTION:** Do not use a screwdriver or other metallic object to remove the batteries from the battery holder or the handset. This could cause a short circuit.

Handset

The battery icon will show when the battery needs to be replaced. Replace with two 1.5 V AAA alkaline batteries.

Receiver

Frequent beeps for 3 seconds when the motor turns indicate the batteries in the battery holder need to be replaced. Replace with four 1.5 V AA alkaline batteries.

Automatic Shut Off

Countdown Timer

At the end of countdown time period, the fire turns off. The Countdown Timer only works in Manual, Thermostatic, and Eco Modes. Maximum countdown time is 9 hours and 50 minutes.

Low Battery Receiver

With low battery power in the battery holder, the system shuts off the fire completely. (This will not happen if the power is completely interrupted.)

Seven Day Shut Off

The system shuts off the fire completely if there is no change in flame height for 7 days.

Automatic Turn Down

3 Hour No Communication Function

The valve will turn to pilot flame if there is no communication between the handset and receiver for a 3-hour period. The fire will continue to function normally when communication is restored.

Appendix A-Remote Control Operation

Error Codes

In the event of an error condition with the handset or fireplace, the handset will display an error code.

Failure Code	Message on Handset	Duration of Display	Symptom	Possible Cause
F04	F04	4 sec	• No pilot flame within 30 sec • **Note:** after 3 failed ignition sequences, F06 shown	• No gas supply • Air in pilot supply line • No spark • Reversed polarity in thermocouple wiring
F06	F06	4 sec	• 3 failed ignition sequences in 5 minutes • Fire is not responding, no pilot flame	• No gas supply • Air in pilot supply line • No spark • Reversed polarity in thermocouple wiring • Incorrect pilot orifice if valve has been converted from LPG to NG or vice versa
F07	Low battery symbol	Permanent	• Battery icon flashes on handset display	• Low battery in handset
F09	F09	4 sec	• Fire is not responding • No electronic control of fire	• Down arrow button was not pressed during pairing • Receiver and handset are not synced
F46	F46	4 sec	• Fire is not responding • Intermittent response • No electronic control of fire	• No or bad connection between receiver and handset • No power at receiver (batteries low) • Low communication range (mains adapter faulty, handset not communicating with receiver)